Data Link Layer

Data link layer is the second layer in OSI reference model and lies above the physical layer. The data link layer performs the following functions.

1. Data link layer receives the data from the network layer & divide it into manageable units called frames.
2. It then provides the addressing information by adding header to each frame. Physical addresses of source & destination machines are added to each frame.

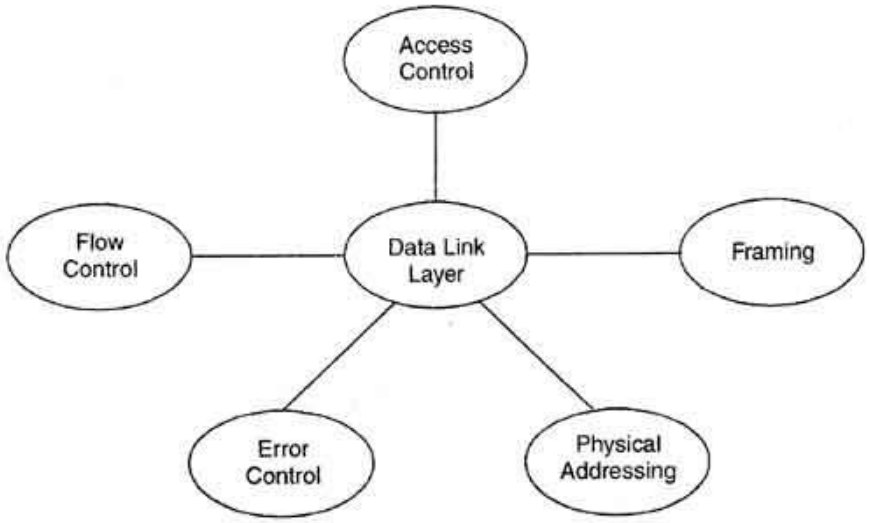

Functions of data link layer

3. It provides flow control mechanism to ensure that sender is not sending the data at the speed that the receiver cannot process.
4. It also provide error control mechanism to detect & retransmit damaged, duplicate, or lost frame, thus adding reliability to physical layer.
5. Another function of data link layer is access control. When two or more devices are attached to the same link, data link layer protocols determine which device has control over the link at any given time.

In LAN data link layer is divided in the 2 layers:

1. Logical Lick Control Sub-layer
2. Medium Access Layer

Logical Link Control SubLayer: The uppermost SubLayer is Logical Link Control (LLC). This SubLayer multiplexes protocols running atop the data link layer, and optionally provides flow control, acknowledgment, and error recovery. The LLC provides addressing and control of the data link. It specifies which mechanisms are to be used for addressing stations over the transmission medium and for controlling the data exchanged between the originator and recipient machines.

Media Access Control SubLayer: The SubLayer below it is Media Access Control (MAC). Sometimes this refers to the SubLayer that determines who is allowed to access the media at any one time. Other times it refers to a frame structure with MAC addresses inside. There are generally two forms of media access control: distributed and centralized. Both of these may be compared to communication between

people: The Media Access Control SubLayer also determines where one frame of data ends and the next one starts. There are four means of doing that: a time based, character counting, byte stuffing and bit stuffing.

Services Provided To Network Layer by Data Link Layer

Data link layer provides several services to the network layer.

• The one of the major service provided is the transferring the data from network layer on the source machine to the network layer on destination machine.

• On source machine data link layer receives the data from network layer and on destination machine pass on this data to the network layer as shown in Fig.

• The path shown in fig (a) is the virtual path. But the actual path is Network layer -> Data link layer -> Physical layer on source machine, then to physical media and thereafter physical layer -> Data link layer -> Network layer on destination machine

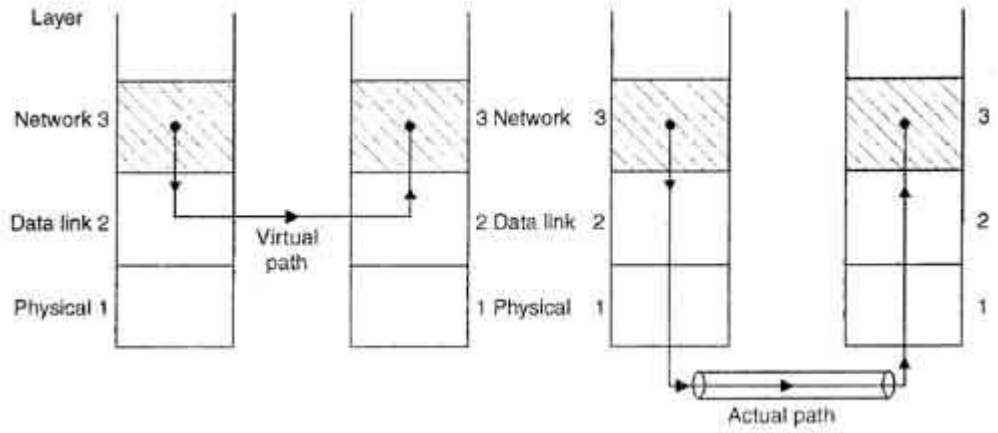

(a) Virtual Communication (b) Actual Communication

Unacknowledged Connectionless Service

- In this type of service source machine sends frames to destination machine but the destination machine does not send any acknowledgement of these frames back to the source. Hence it is called unacknowledged service.
- There is no connection establishment between source and destination machine before data transfer or release after data transfer. Therefore it is known as connectionless service.
- There is no error control i.e. if any frame is lost due to noise on the line; no attempt is made to recover it.
- This type of service is used when error rate is low.
- It is suitable for real time traffic such as speech.

Acknowledged Connectionless Service

- In this service, neither the connection is established before the data transfer nor is it released after the data transfer between source and destination.
- When the sender sends the data frames to destination, destination machine sends back the acknowledgement of these frames.

- This type of service provides additional reliability because source machine retransmit the frames if it does not receive the acknowledgement of these frames within the specified time.
- This service is useful over unreliable channels, such as wireless systems.

Acknowledged Connection - Oriented Service

- This service is the most sophisticated service provided by data link layer to network layer.
- It is connection-oriented. It means that connection is establishment between source & destination before any data is transferred.
- In this service, data transfer has three distinct phases:-
    - Connection establishment
    - Actual data transfer
    - Connection release
- Here, each frame being transmitted from source to destination is given a specific number and is acknowledged by the destination machine.
- All the frames are received by destination in the same order in which they are sent by the source.

Framing

Data transmission in the physical layer means moving bits in the form of a signal from the source to the destination. The physical layer provides bit synchronization to ensure that the sender and receiver use the same bit durations and timing. The data link layer, on the other hand, needs to pack bits into frames, so that each frame is distinguishable from another.

Framing in the data link layer separates a message from one source to a destination, or from other messages to other destinations, by adding a sender address and a destination address. The destination address defines where the packet is to go; the sender address helps the recipient acknowledge the receipt. Although the whole message could be packed in one frame that is not normally done. One reason is that a frame can be very large, making flow and error control very inefficient. When a message is carried in one very large frame, even a single-bit error would require the retransmission of the whole message. When a message is divided into smaller frames, a single-bit error affects only that small frame.

Fixed-Size Framing

Frames can be of fixed or variable size. In fixed-size framing, there is no need for defining the boundaries of the frames; the size itself can be used as a delimiter. An example of this type of framing is the ATM wide-area network, which uses frames of fixed size called cells.

Variable-Size Framing

In variable-size framing, we need a way to define the end of the frame and the beginning of the next. Historically, two approaches were used for this purpose:

Character-Oriented Protocols (Byte Stuffing)

In a character-oriented protocol, data to be carried are 8-bit characters from a coding system such as ASCII. The header, which normally carries the source and destination addresses and other control

information, and the trailer, which carries error detection or error correction redundant bits, are also multiples of 8 bits.

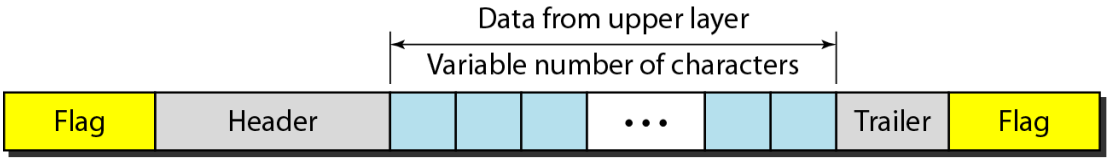

Fig: Start and End flag enclosing the frame

To separate one frame from the next, an 8-bit (1-byte) flag is added at the beginning and the end of a frame. The flag, composed of protocol-dependent special characters, signals the start or end of a frame.

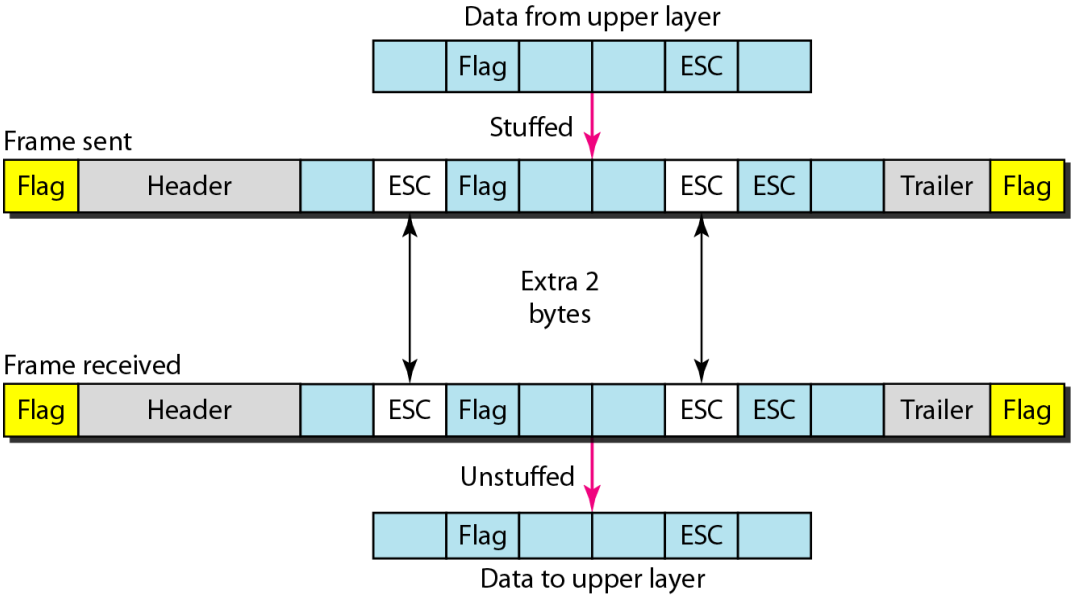

Fig: Byte Stuffing and Un-stuffing

Any pattern used for the flag could also be part of the information. If this happens, the receiver, when it encounters this pattern in the middle of the data, thinks it has reached the end of the frame. To fix this problem, a byte-stuffing strategy was added to character-oriented framing. In byte stuffing (or character stuffing), a special byte is added to the data section of the frame when there is a character with the same pattern as the flag. The data section is stuffed with an extra byte. This byte is usually called the escape character (ESC), which has a predefined bit pattern. Whenever the receiver encounters the ESC character, it removes it from the data section and treats the next character as data, not a delimiting flag.

Byte stuffing by the escape character allows the presence of the flag in the data section of the frame, but it creates another problem. What happens if the text contains one or more escape characters followed by a flag? The receiver removes the escape character, but keeps the flag, which is incorrectly interpreted as the end of the frame. To solve this problem, the escape characters that are part of the text must also be marked by another escape character. In other words, if the escape character is part of the text, an extra one is added to show that the second one is part of the text. Byte stuffing is the process of adding 1 extra byte whenever there is a flag or escape character in the text.

Bit-Oriented Protocols (Bit Stuffing)

In a bit-oriented protocol, the data section of a frame is a sequence of bits to be interpreted by the upper layer as text, graphic, audio, video, and so on. However, in addition to headers (and possible trailers),

we still need a delimiter to separate one frame from the other. Most protocols use a special 8-bit pattern flag 01111110 as the delimiter to define the beginning and the end of the frame, as shown in Figure.

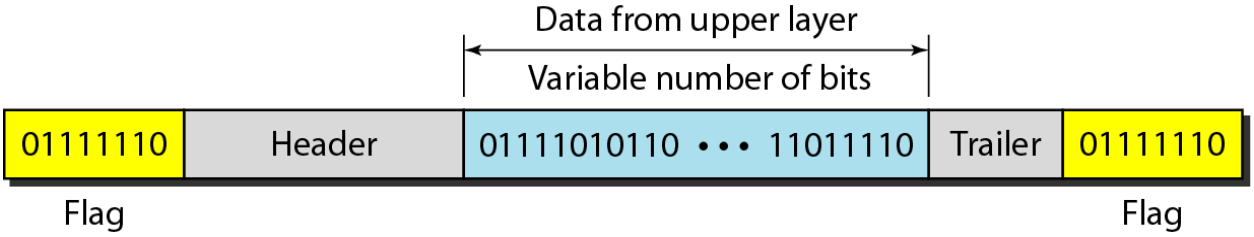

This flag can create the same type of problem we saw in the byte-oriented protocols. That is, if the flag pattern appears in the data, we need to somehow inform the receiver that this is not the end of the frame. We do this by stuffing 1 single bit (instead of 1 byte) to prevent the pattern from looking like a flag. The strategy is called bit stuffing. In bit stuffing, if a 0 and five consecutive 1 bits are encountered, an extra 0 is added. This extra stuffed bit is eventually removed from the data by the receiver. Note that the extra bit is added after one 0 followed by five 1s regardless of the value of the next bit. This guarantees that the flag field sequence does not inadvertently appear in the frame. Bit stuffing is the process of adding one extra 0 whenever five consecutive 18 follow a 0 in the data, so that the receiver does not mistake the pattern 0111110 for a flag. Figure shows bit stuffing at the sender and bit removal at the receiver. Note that even if we have a 0 after five 1s, we still stuff a 0. The 0 will be removed by the receiver.

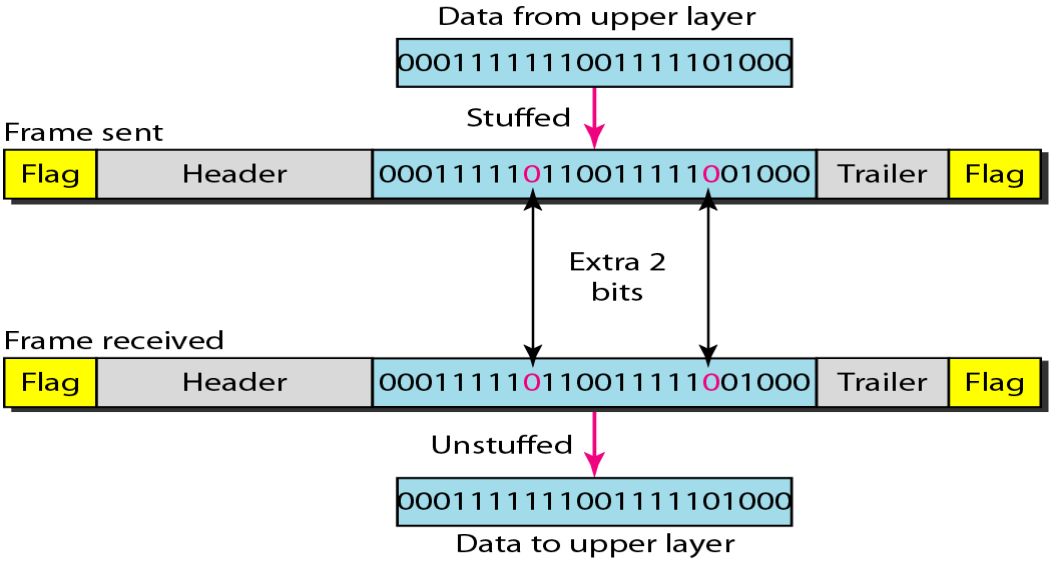

Fig: Bit Stuffing and Un-stuffing

Error Detection and Correction

Error Detection and Correction refers to mechanisms to detect and correct errors that occur in the transmission of frames. Frames arrive in the same order in which they are sent, and each transmitted frame suffers an arbitrary and variable amount of delay before reception. In addition, we admit the possibility of two types of errors.

The most common techniques for error control are based on following ingredients.

• **Positive acknowledgement:** The destination returns a positive acknowledgement to successfully received, error-free frames.

• **Retransmission after time out:** The source retransmits a frame that has not been acknowledged after a predetermined amount of time.
•**Negative acknowledgement and retransmission:** The destination returns a negative acknowledgement to frames in which an error is detected. The source retransmits such frames.
Collectively, these mechanisms are all referred to as automatic repeat request (ARQ). The effect of ARQ is to turn an unreliable data link into a reliable one.

Types of errors

These interferences can change the timing and shape of the signal. If the signal is carrying binary encoded data, such changes can alter the meaning of the data. These errors can be divided into two types: Single-bit error and Burst error.

Single-bit Error

The term single-bit error means that only one bit of given data unit (such as a byte, character, or data unit) is changed from 1 to 0 or from 0 to 1 as shown in Figure.

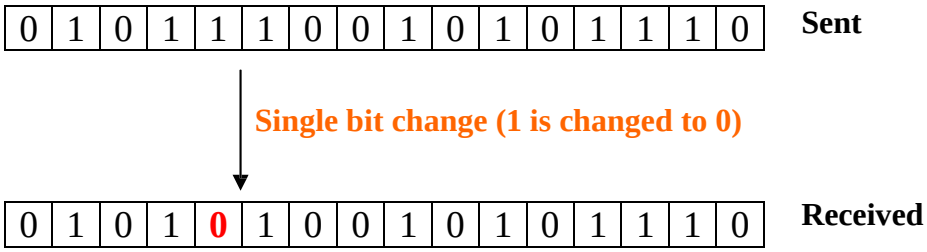

Figure 3.2.1 Single bit error

Single bit errors are least likely type of errors in serial data transmission. To see why, imagine a sender sends data at 10 Mbps. This means that each bit lasts only for 0.1 µs (micro-second). For a single bit error to occur noise must have duration of only 0.1 µs (micro-second), which is very rare. However, a single-bit error can happen if we are having a parallel data transmission. For example, if 16 wires are used to send all 16 bits of a word at the same time and one of the wires is noisy, one bit is corrupted in each word.

Burst Error

The term burst error means that two or more bits in the data unit have changed from 0 to 1 or vice-versa. Note that burst error doesn't necessary means that error occurs in consecutive bits. The length of the burst error is measured from the first corrupted bit to the last corrupted bit. Some bits in between may not be corrupted.

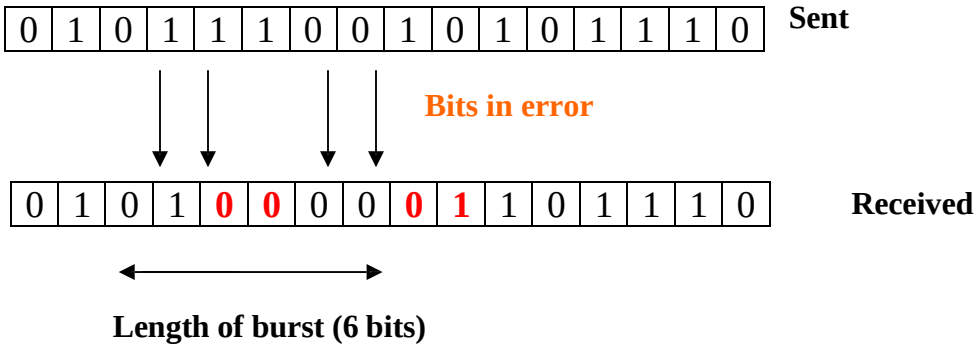

Figure: Burst Error

Burst errors are mostly likely to happen in serial transmission. The duration of the noise is normally longer than the duration of a single bit, which means that the noise affects data; it affects a set of bits as shown in Fig. 3.2.2. The number of bits affected depends on the data rate and duration of noise.

Error Detecting Codes

Basic approach used for error detection is the use of redundancy, where additional bits are added to facilitate detection and correction of errors. Popular techniques are:

- Simple Parity check
- Two-dimensional Parity check
- Checksum
- Cyclic redundancy check

Simple Parity Checking or One-dimension Parity Check

The most common and least expensive mechanism for error- detection is the simple parity check. In this technique, a redundant bit called **parity bit**, is appended to every data unit so that the number of 1s in the unit (including the parity becomes even).

Blocks of data from the source are subjected to a check bit or *Parity bit* generator form, where a parity of 1 is added to the block if it contains an odd number of 1's (ON bits) and 0 is added if it contains an even number of 1's. At the receiving end the parity bit is computed from the received data bits and compared with the received parity bit, as shown in Fig. 3.2.3. This scheme makes the total number of 1's even, that is why it is called *even parity checking*. Considering a 4-bit word, different combinations of the data words and the corresponding code words are given in Table

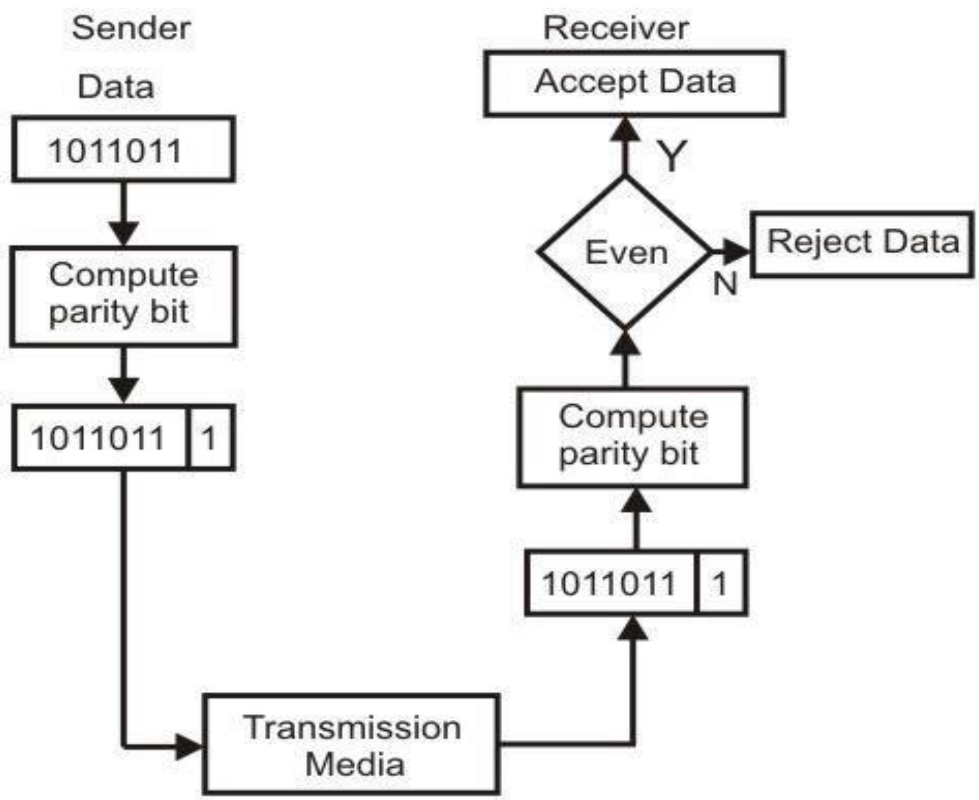

Figure: Even-parity checking scheme

Table: Possible 4-bit data words and corresponding code words

Decimal value	Data Block	Parity bit	Code word
0	0000	0	00000
1	0001	1	00011
2	0010	1	00101
3	0011	0	00110
4	0100	1	01001
5	0101	0	01010
6	0110	0	01100
7	0111	1	01111
8	1000	1	10001
9	1001	0	10010

Note that for the sake of simplicity, we are discussing here the even-parity checking, where the number of 1's should be an even number. It is also possible to use *odd-parity* checking, where the number of 1's should be odd.

Two-dimension Parity Check

Performance can be improved by using two-dimensional parity check, which organizes the block of bits in the form of a table. Parity check bits are calculated for each row, which is equivalent to a simple parity check bit. Parity check bits are also calculated for all columns then both are sent along with the data. At the receiving end these are compared with the parity bits calculated on the received data. This is illustrated in Fig.

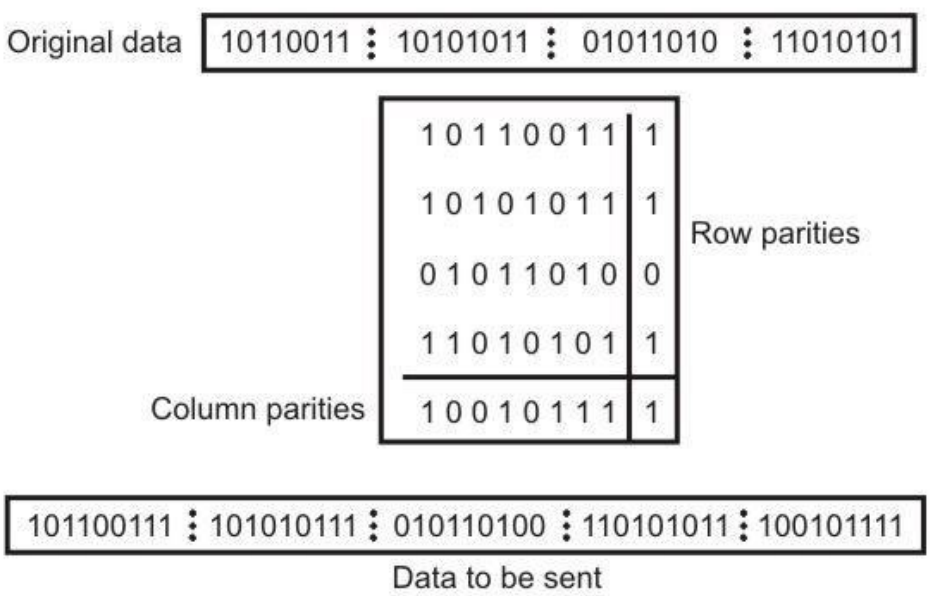

Figure: Two-dimension Parity Checking

Performance

Two- Dimension Parity Checking increases the likelihood of detecting burst errors. As we have shown in Fig. that a 2-D Parity check of n bits can detect a burst error of n bits. A burst error of more than n bits is also detected by 2-D Parity check with a high- probability. There is, however, one pattern of error that remains elusive. If two bits in one data unit are damaged and two bits in exactly same position in

another data unit are also damaged, the 2-D Parity check checker will not detect an error. For example, if two data units: 11001100 and 10101100. If first and second from last bits in each of them is changed, making the data units as 01001110 and 00101110, the error cannot be detected by 2-D Parity check.

Checksum

The checksum is used in the Internet by several protocols although not at the data link layer. Suppose our data is a list of five 4-bit numbers that we want to send to a destination. In addition to sending these numbers, we send the sum of the numbers. For example, if the set of numbers is (7, 11, 12, 0, 6), we send (7, 11, 12, 0, 6, 36), where 36 is the sum of the original numbers. The receiver adds the five numbers and compares the result with the sum. If the two are the same, the receiver assumes no error, accepts the five numbers, and discards the sum. Otherwise, there is an error somewhere and the data are not accepted.

Checksum using 1's complement

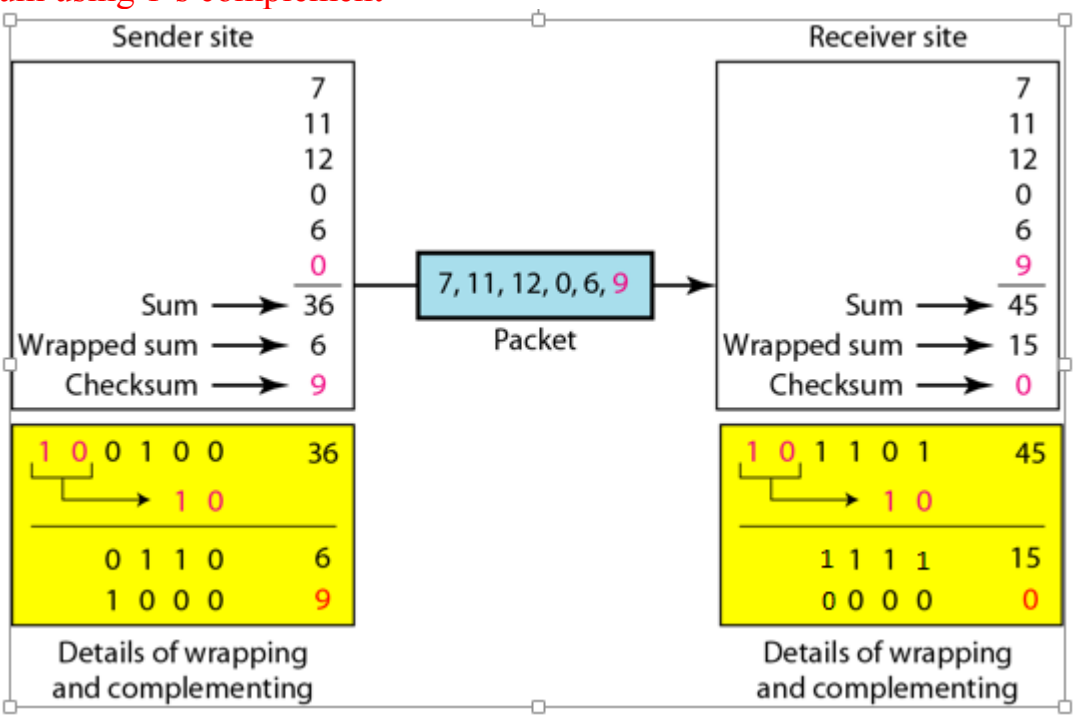

Figure shows the process at the sender and at the receiver. The sender initializes the checksum to 0 and adds all data items and the checksum. The result is 36. However, 36 cannot be expressed in 4 bits. The extra two bits are wrapped and added with the sum to create the wrapped sum value 6. In the figure, we have shown the details in binary. The sum is then complemented, resulting in the checksum value 9 (15 − 6 = 9). The sender now sends six data items to the receiver including the checksum 9. The receiver follows the same procedure as the sender. It adds all data items (including the checksum); the result is 45. The sum is wrapped and becomes 15. The wrapped sum is complemented and becomes 0. Since the value of the checksum is 0, this means that the data is not corrupted. The receiver drops the checksum and keeps the other data items. If the checksum is not zero, the entire packet is dropped.

Cyclic Redundancy Checks (CRC)

This Cyclic Redundancy Check is the most powerful and easy to implement technique. Unlike checksum scheme, which is based on addition, CRC is based on binary division. In CRC, a sequence of redundant bits, called **cyclic redundancy check bits**, are appended to the end of data unit so that

the resulting data unit becomes exactly divisible by a second, predetermined binary number. At the destination, the incoming data unit is divided by the same number. If at this step there is no remainder, the data unit is assumed to be correct and is therefore accepted. A remainder indicates that the data unit has been damaged in transit and therefore must be rejected. The generalized technique can be explained as follows.

If a *m* bit message is to be transmitted, the transmitter generates an *r*-bit sequence, known as *Frame Check Sequence* (FCS) so that the *(m+r)* bits are actually being transmitted. Now this *r*-bit FCS is generated by dividing the original number, appended by *r* zeros, by *a* predetermined number. This number, which is *(r+1)* bit in length, can also be considered as the coefficients of a polynomial, called G*enerator Polynomial.* The remainder of this division process generates the *r*-bit FCS. On receiving the packet, the receiver divides the *(m+r)* bit frame by the same predetermined number and if it produces no remainder, it can be assumed that no error has occurred during the transmission. Operations at both the sender and receiver end are shown in Fig.

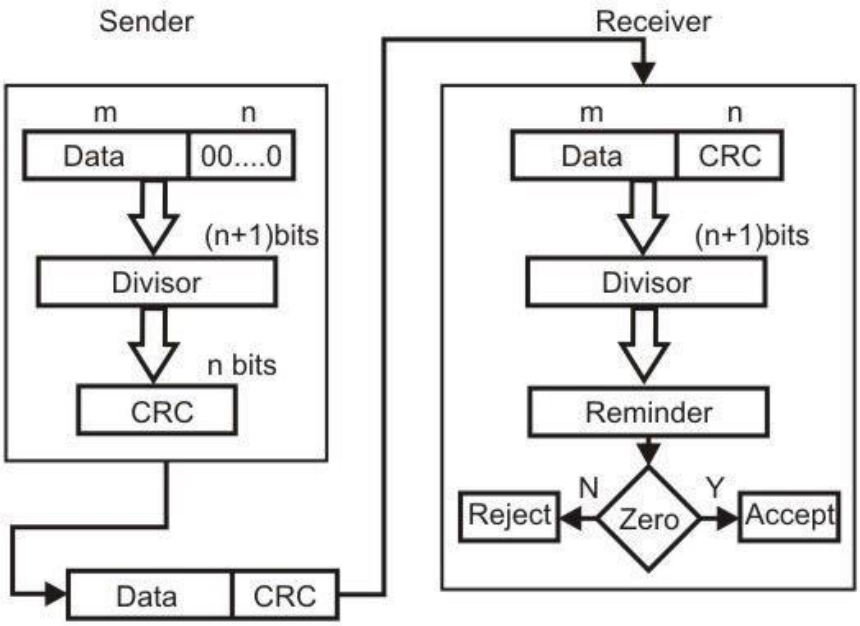

Figure 3.2.6 Basic scheme for Cyclic Redundancy Checking

This mathematical operation performed is illustrated in Fig. 3.2.7 by dividing a sample 4- bit number by the coefficient of the generator polynomial x^3+x+1, which is 1011, using the modulo-2 arithmetic. Modulo-2 arithmetic is a binary addition process without any carry over, which is just the Exclusive-OR operation. Consider the case where m=1101. Hence we have to divide 1101000 (i.e. *m* appended by 3 zeros) by 1011, which produces the remainder r=001, so that the bit frame *(m+r)* =1101001 is actually being transmitted through the communication channel. At the receiving end, if the received number, i.e., 1101001 is divided by the same generator polynomial 1011 to get the remainder as 000, it can be assumed that the data is free of errors.

```
          1111
1011 | 1101000
       1011
       ----
        1100
        1011
        ----
         1110
         1011
         ----
          1010
          1011
          ----
           001  <------ r
```

Figure: Cyclic Redundancy Check (CRC) process generates FCS of 001 and actual bits transmitted are 1101001

Example: Original Message Bits (m) = 1010001101
Generator Polynomial= $x^5 + x^4 + x^2 + 1$ (110101)
Number of Zeros to append before division = 6 – 1 = 5

Sender End	Receiver End
1 1 0 0 1 0 1 0 0 1 1 1 1 0 1 0 1 | 1 0 1 0 0 0 1 1 0 1 0 0 0 0 0 1 1 0 1 0 1 1 1 1 0 1 1 1 1 0 1 0 1 1 1 1 0 1 0 1 1 0 1 0 1 1 1 1 1 1 0 1 1 0 1 0 1 1 0 1 1 0 0 1 1 0 1 0 1 1 1 0 0 1 0 1 1 0 1 0 1 0 1 1 1 0	1 1 0 0 1 0 1 0 0 1 1 1 1 0 1 0 1 | 1 0 1 0 0 0 1 1 0 1 0 1 1 1 0 1 1 0 1 0 1 1 1 1 0 1 1 1 1 0 1 0 1 1 1 1 0 1 0 1 1 0 1 0 1 1 1 1 1 1 0 1 1 0 1 0 1 1 0 1 1 1 1 1 1 0 1 0 1 1 1 0 1 0 1 1 1 0 1 0 1 0 0 0 0 0 0
Actual bit transmitted = 101000110101110	Since Remainder is Zero data is accepted

Fig: CRC Demonstration

Flow Control and Error Control

Flow Control is a technique so that transmitter and receiver with different speed characteristics can communicate with each other. Flow control ensures that a transmitting station, such as a server with higher processing capability, does not overwhelm a receiving station, such as a desktop system, with lesser processing capability. This is where there is an orderly flow of transmitted data between the source and the destination.

When an error is detected, the receiver can have the specified frame retransmitted by the sender. This process is commonly known as **Automatic Repeat Request (ARQ).** For example, Internet's Unreliable Delivery Model allows packets to be discarded if network resources are not available, and demands that ARQ protocols make provisions for retransmission.

There are two methods developed for flow control namely **Stop-and-wait** and **Sliding-window**. Stop-and-wait is also known as Request/reply sometimes. Request/reply (Stop-and-wait) flow control requires each data packet to be acknowledged by the remote host before the next packet is sent. **Sliding window** algorithms permit multiple data packets to be in simultaneous transit, making more efficient use of network.

Stop-and-Wait

This is the simplest form of flow control where a sender transmits a data frame. After receiving the frame, the receiver indicates its willingness to accept another frame by sending back an ACK frame acknowledging the frame just received. The sender must wait until it receives the ACK frame before sending the next data frame. This is sometimes referred to as *Ping-Pong* behavior, request/reply is simple to understand and easy to implement, but not very efficient.

Figure below illustrates the operation of the stop-and-wait protocol. The down arrows show the sequence of data frames being sent across the link from the sender (top to the receiver (bottom). The protocol relies on two-way transmission (full duplex or half duplex) to allow the receiver at the remote node to return frames acknowledging the successful transmission. The acknowledgements are shown as up arrow in the diagram, and flow back to the original sender. A small processing delay may be introduced between reception of the last byte of a Data Frame and generation of the corresponding ACK.

Major drawback of Stop-and-Wait Flow Control is that only one frame can be in transmission at a time, this leads to inefficiency if propagation delay is much longer than the transmission delay.

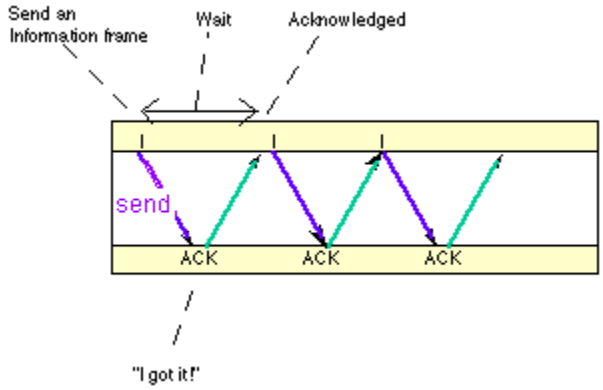

Fig: Stop and Wait Protocol

Stop-and-Wait ARQ (Stop and Wait with error control)

In Stop-and-Wait ARQ, which is simplest among all protocols, the sender (say station A) transmits a frame and then waits till it receives positive acknowledgement (ACK) or negative acknowledgement (NACK) from the receiver (say station B). Station B sends an ACK if the frame is received correctly, otherwise it sends NACK. Station A sends a new frame after receiving ACK; otherwise it retransmits the old frame, if it receives a NACK. This is illustrated in figure below.

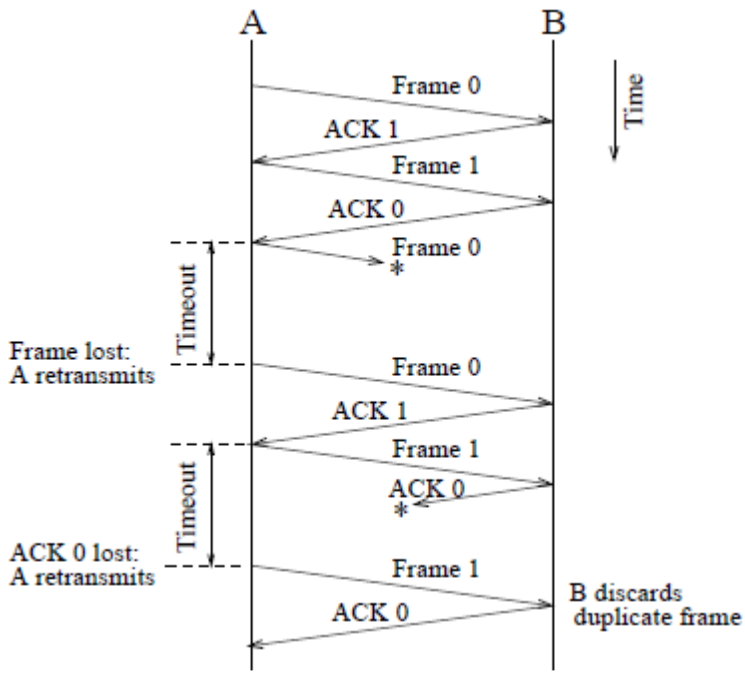

Fig: Stop and Wait ARQ

Link Utilization in Stop-and-Wait

Let us assume the following:

Transmission time: The time it takes for a station to transmit a frame (Let's say 1)

Propagation delay: The time it takes for a bit to travel from sender to receiver (expressed as *a*).

- *a < 1* :The frame is sufficiently long such that the first bits of the frame arrive at the destination before the source has completed transmission of the frame.
- *a > 1*: Sender completes transmission of the entire frame before the leading bits of the frame arrive at the receiver.
- The link utilization U = 1/(1+2a),
    - a = Propagation time / transmission time

It is evident from the above equation that the link utilization is strongly dependent on the ratio of the propagation time to the transmission time. When the propagation time is small, as in case of LAN environment, the link utilization is good. But, in case of long propagation delays, as in case of satellite communication, the utilization can be very poor. To improve the link utilization, we can use the following (sliding-window) protocol instead of using stop-and-wait protocol.

Sliding Window Protocol

- A universally accepted flow control procedure is the **sliding window protocol**
  - Frames and acknowledgements are numbered using **sequence numbers**
  - Sender maintains a list of sequence numbers (frames) it is allowed to transmit, called **sending window**
  - Receiver maintains a list of sequence numbers it is prepared to receive, called **receiving window**
  - A sending window of size N means that sender can send up to N frames without the need for an ACK
  - A window size of N implies buffer space for N frames
  - For n-bit sequence number, we have 2^n numbers: $0, 1, \cdots, 2^n - 1$, but the maximum window size $N = 2^n - 1$ (not 2^n)
  - ACK3 means that receiver has received frame 0 to frame 2 correctly, ready to receive frame 3 (and rest of N frames within window)

Illustration:

- Consider the case of 3-bit sequence number with maximum window size $N = 7$
- This illustration shows that

  Sending and receiving windows can shrink or grow during operation

  The receiver do not need to acknowledge every frames
- If both sending and receiving window sizes are $N = 1$, the sliding window protocol reduces to the stop-and-wait

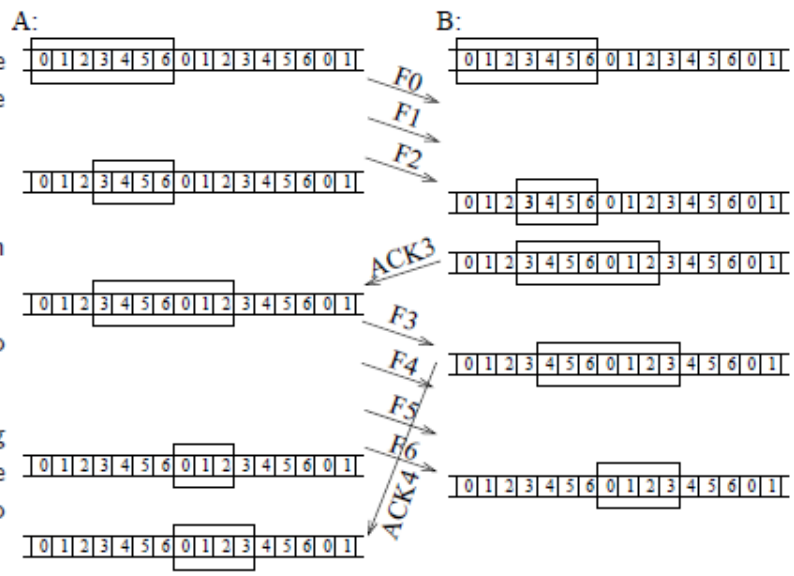

Fig: Illustration of sliding window of size 7

Hence, Sliding Window Flow Control

- Allows transmission of multiple frames
- Assigns each frame a k-bit sequence number
- Range of sequence number is $[0 \ldots 2^k-1]$,

Go-back-N ARQ

The most popular ARQ protocol is the go-back-N ARQ, where the sender sends the frames continuously without waiting for acknowledgement. That is why it is also called as *continuous ARQ*. As the receiver receives the frames, it keeps on sending ACKs or a NACK, in case a frame is incorrectly received. When the sender receives a NACK, it retransmits the frame in error plus all the succeeding frames as shown in first figure. Hence, the name of the protocol is go-back-N ARQ. If a frame is lost, the receiver sends NAK after receiving the next frame as shown in second figure. In case there is long delay before sending the NAK, the sender will resend the lost frame after its timer times out. If the ACK frame sent by the receiver is lost, the sender resends the frames after its timer times out as shown in third figure.

Assuming full-duplex transmission, the receiving end sends piggybacked acknowledgement by using some number in the ACK field of its data frame. Let us assume that a 3-bit sequence number is used and suppose that a station sends frame 0 and gets back an RR1, and then sends frames 1, 2, 3, 4, 5, 6, 7, 0 and gets another RR1.This might either mean that RR1 is a cumulative ACK or all 8 frames were damaged. This ambiguity can be overcome if the maximum window size is limited to 7, i.e. for a k-bit sequence number field it is limited to 2^k-1. The number N (=2^k-1) specifies how many frames can be sent without receiving acknowledgement.

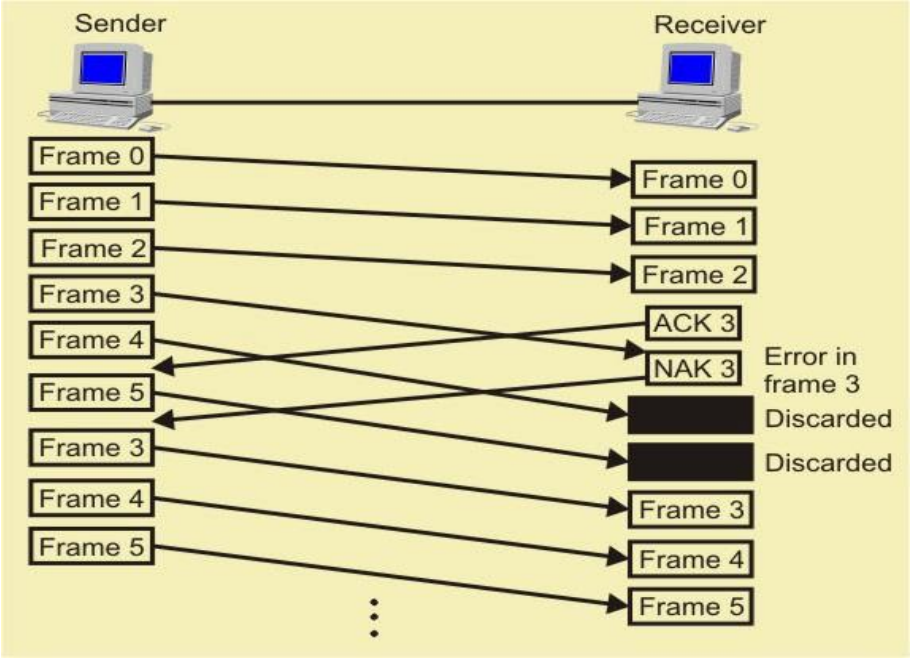

Figure: Frames in error in go-Back-N ARQ

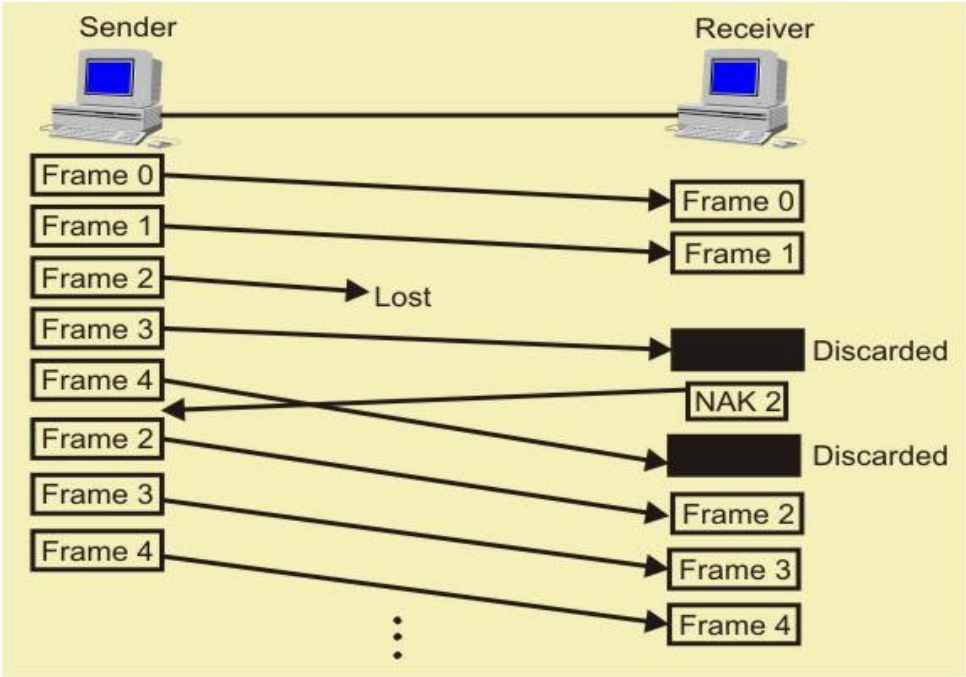

Figure: Lost Frames in Go-Back-N ARQ

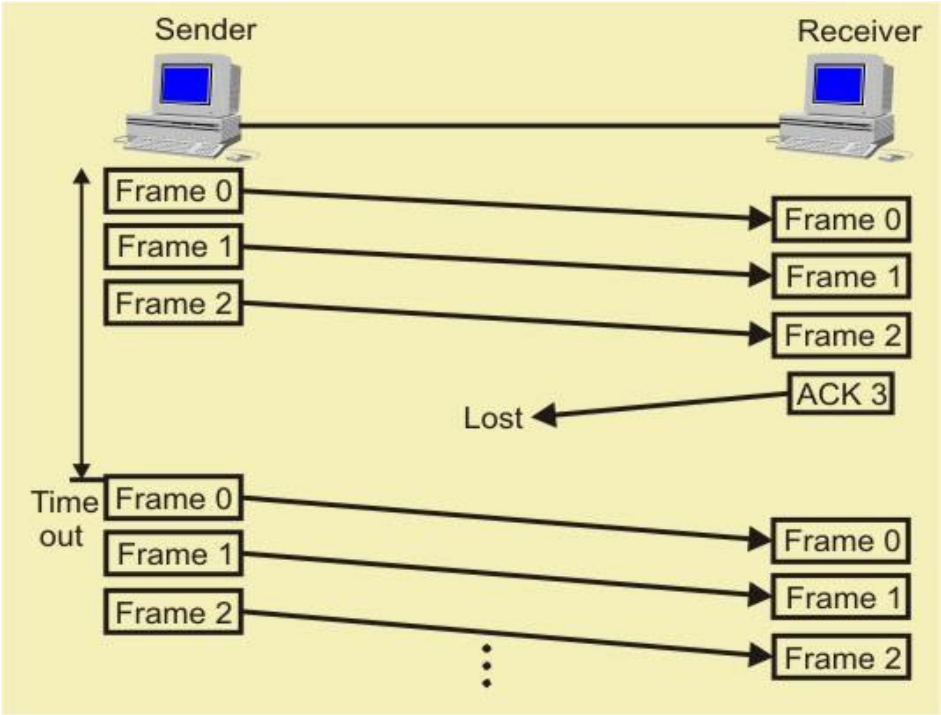

Figure: Lost ACK in Go-Back-N ARQ

If no acknowledgement is received after sending N frames, the sender takes the help of a timer. After the time-out, it resumes retransmission. The go-back-N protocol also takes care of damaged frames and damaged ACKs. This scheme is little more complex than the previous one but gives much higher throughput.

Assuming full-duplex transmission, the receiving end sends piggybacked acknowledgement by using some number in the ACK field of its data frame. Let us assume that a 3-bit sequence number is used and suppose that a station sends frame 0 and gets back an RR1, and then sends frames 1, 2, 3, 4, 5, 6, 7, 0 and gets another RR1.This might either mean that RR1 is a cumulative ACK or all 8 frames were damaged. This ambiguity can be overcome if the maximum window size is limited to 7, i.e. for a k-bit sequence number field it is limited to 2^k-1. The number N (=2^k-1) specifies how many frames can be sent without receiving acknowledgement. If no acknowledgement is received after sending N frames, the sender takes the help of a timer. After the time-out, it resumes retransmission. The go-back-N protocol also takes care of damaged frames and damaged ACKs. This scheme is little more complex than the previous one but gives much higher throughput.

Selective-Repeat ARQ

The selective-repetitive ARQ scheme retransmits only those for which NAKs are received or for which timer has expired, this is shown in the Figure below. This is the most efficient among the ARQ schemes, but the sender must be more complex so that it can send out-of-order frames. The receiver also must have storage space to store the post- NAK frames and processing power to reinsert frames in proper sequence.

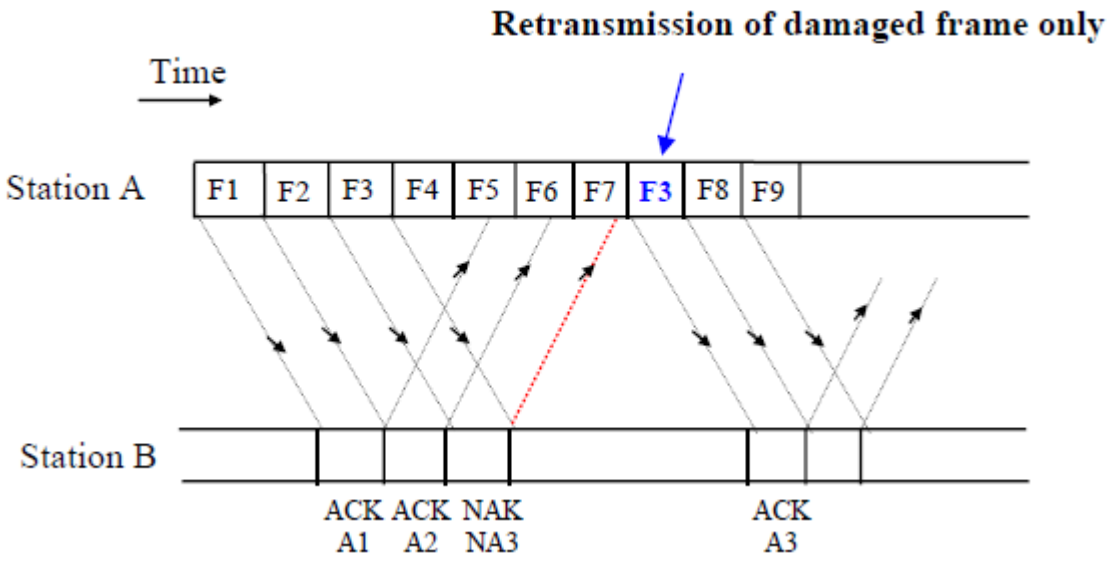

Fig: Selective Repeat ARQ

Media Access Sub Layer

1. Introduction

A network of computers based on multi-access medium requires a protocol for effective sharing of the media. As only one node can send or transmit signal at a time using the broadcast mode, the main problem here is how different nodes get control of the medium to send data, that is *"who goes next?"*. The protocols used for this purpose are known as *Medium Access Control (MAC) techniques*.

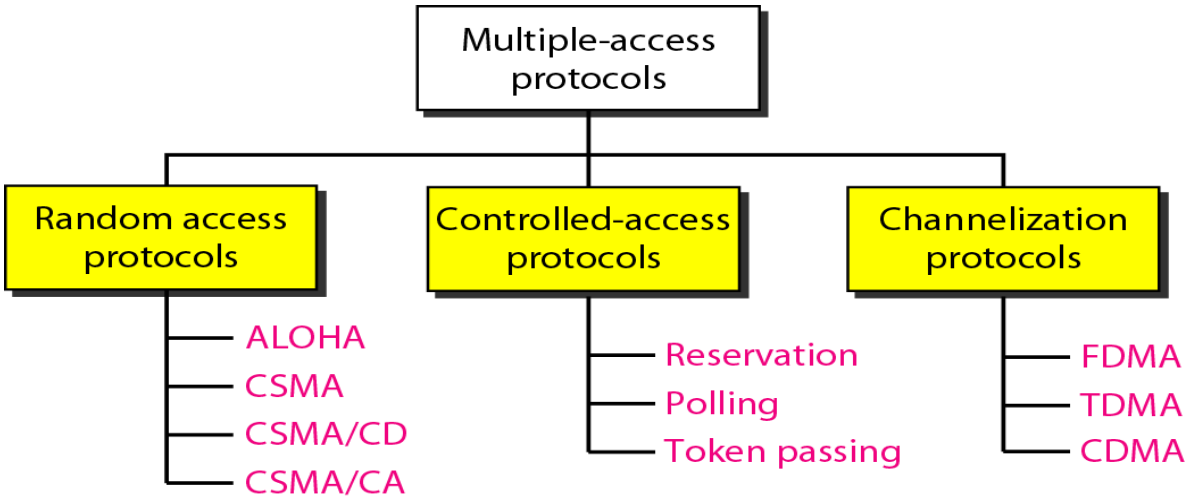

Figure 1: MAC techniques Protocols

Random Access/Contention-based Approaches

In random access or contention methods, no station is superior to another station and none is assigned the control over another. Each station can transmit when it desires on the condition that it follows the predefined procedure, including the testing of the state of the medium.

Two features give this method its name. First, there is no scheduled time for a station to transmit. Transmission is random among the stations. That is why these methods are called *random access.* Second, no rules specify which station should send next. Stations compete with one another to access the medium. That is why these methods are also called *contention* methods.

In a random access method, each station has the right to the medium without being controlled by any other station. However, if more than one station tries to send, there is an access conflict-collision-and the frames will be either destroyed or modified.

ALOHA

ALOHA, the earliest random access method, was developed at the University of Hawaii in early 1970. It was designed for a radio (wireless) LAN, but it can be used on any shared medium. The medium is shared between the stations. When a station sends data, another station may attempt to do so at the same time. The data from the two stations collide and become garbled.

Pure ALOHA Protocol

The original ALOHA protocol is called pure ALOHA. This is a simple, but elegant protocol. Each station sends a frame whenever it has a frame to send. However, since there is only one channel to share, there is the possibility of collision between frames from different stations.

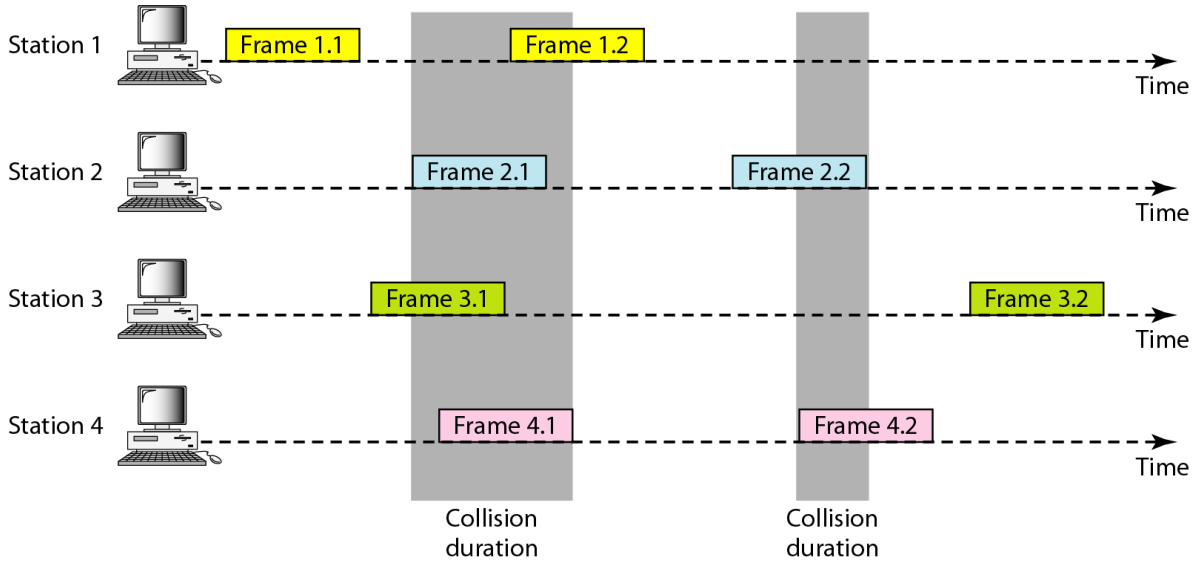

Figure 2: Collision in Pure ALOHA

In the above figure the Frames 1.1 and 3.2 reach the destination while other frames collide and need to be re-transmitted. The pure ALOHA protocol relies on acknowledgments from the receiver. When a station sends a frame, it expects the receiver to send an acknowledgment. If the acknowledgment does not arrive after a time-out period, the station assumes that the frame (or the acknowledgment) has been destroyed and resends the frame. A collision involves two or more stations. If all these stations try to

resend their frames after the time-out, the frames will collide again. Pure ALOHA dictates that when the time-out period passes, each station waits a random amount of time before resending its frame. The randomness will help avoid more collisions. We call this time the back-off time T_B.

Pure ALOHA has a second method to prevent congesting the channel with retransmitted frames. After a maximum number of retransmission attempts Kmax' a station must give up and try later. Figure 3 shows the procedure for pure ALOHA based on the above strategy.

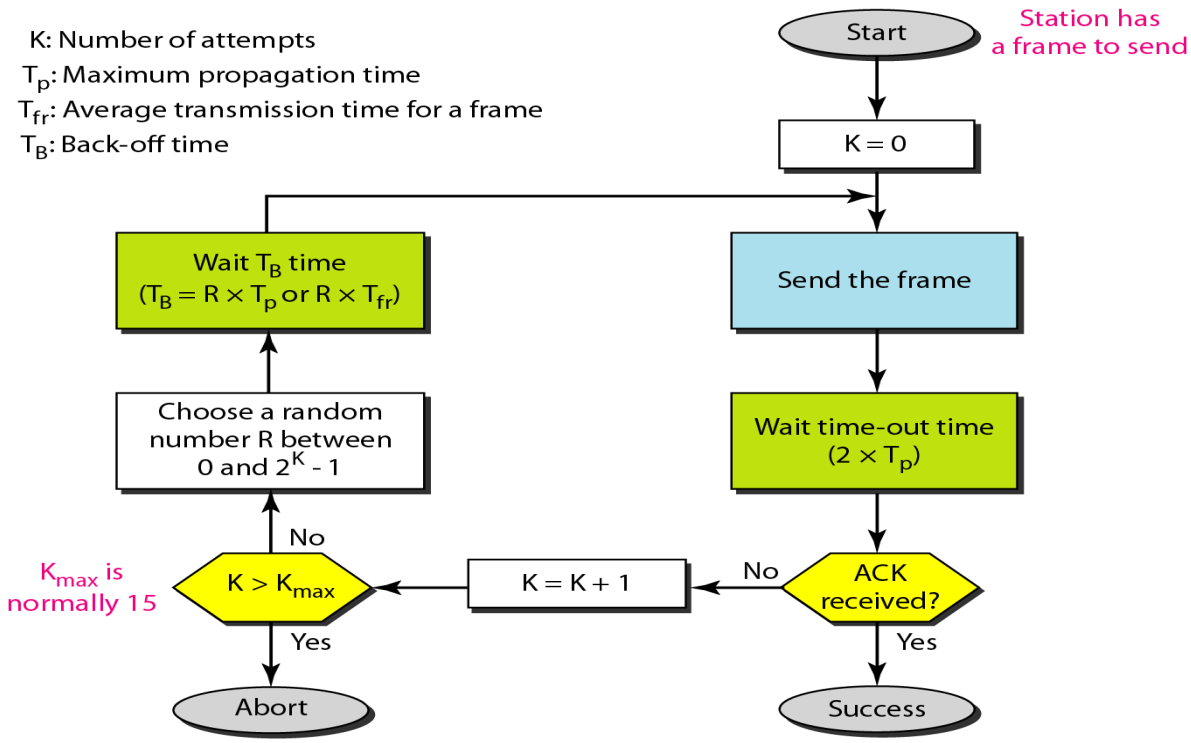

Fig 3: Procedure in Pure ALOHA protocol

Vulnerable Time: Vulnerable time is time in which there is a possibility of collision. We assume that the stations send fixed-length frames with each frame taking T_{fr} s to send.

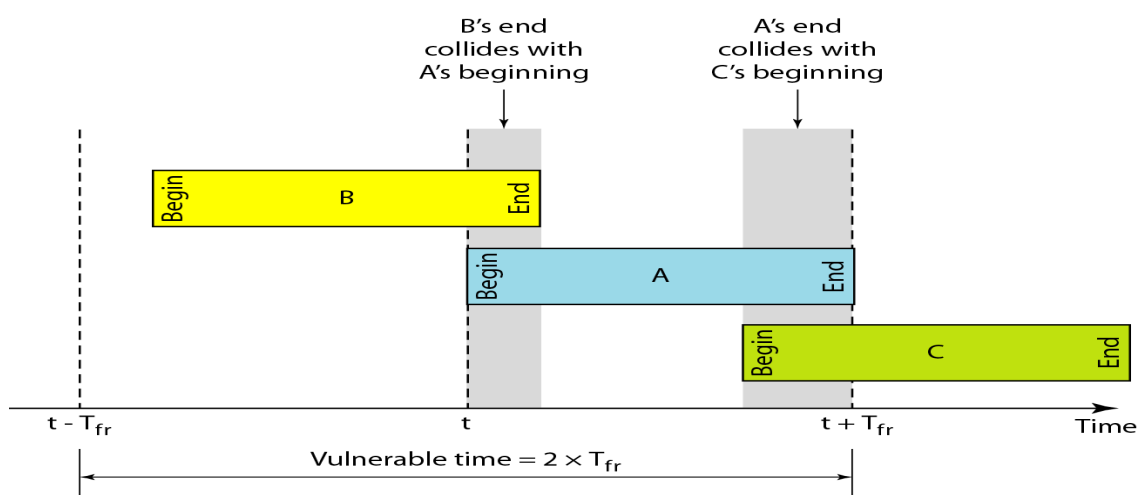

Figure 4: Vulnerable period in Pure ALOHA

Station A sends a frame at time *t*. Now imagine station B has already sent a frame between $t - T_{fr}$ and *t*. This leads to a collision between the frames from station A and station B. The end of B's frame collides with the beginning of A's frame. On the other hand, suppose that station C sends a frame between *t* and $t + T_{fr}$. Here, there is a collision between frames from station A and station C. The beginning of C's frame collides with the end of A's frame. Looking at Figure 4, we see that the vulnerable time, during which a collision may occur in pure ALOHA, is 2 times the frame transmission time.

Pure ALOHA vulnerable time = 2 x T_{fr}

Throughput For Pure ALOHA Protocol

The throughput for pure ALOHA is:

$$S = G \times e^{-2G}$$

The maximum throughput

S_{max}= 0.184 when G= ½ (G=frame per millisecond or load)

Example

A pure ALOHA network transmits 200-bit frames on a shared channel of 200 kbps. What is the throughput if the system (all stations together) produces a) 1000 frames per second b) 500 frames per second and c) 250 frames per second?

Solution

The frame transmission time is 200/200 kbps or 1 ms.

a) If the system creates 1000 frames per second, this is 1 frame per millisecond. The load is 1. In this case $S = G\times e^{-2G}$ or S = 0.135 (13.5 percent). This means that the throughput is 1000 × 0.135 = 135 frames. Only 135 frames out of 100 will probably survive.

b) If the system creates 500 frames per second, this is (1/2) frame per millisecond. The load is (1/2). In this case $S = G \times e^{-2G}$ or S = 0.184 (18.4 percent). This means that the throughput is 500 × 0.184 = 92 and that only 92 frames out of 500 will probably survive. ***Note: that this is the maximum throughput case, percentagewise.***

c) If the system creates 250 frames per second, this is (1/4) frame per millisecond. The load is (1/4). In this case $S = G \times e^{-2G}$ or S = 0.152 (15.2 percent). This means that the throughput is 250 × 0.152 = 38. Only 38 frames out of 250 will probably survive.

Slotted ALOHA Protocol

Pure ALOHA has a vulnerable time of 2 x *Tfr*. This is so because there is no rule that defines when the station can send. A station may send soon after another station has started or soon before another station has finished. Slotted ALOHA was invented to improve the efficiency of pure ALOHA. In slotted ALOHA we divide the time into slots of T_{fr} s and force the station to send only at the beginning of the time slot. Figure 5 shows an example of frame collisions in slotted ALOHA. This reduces the vulnerable period from 2 T_{fr} to T_{fr} and improves efficiency by reducing the probability of collision.

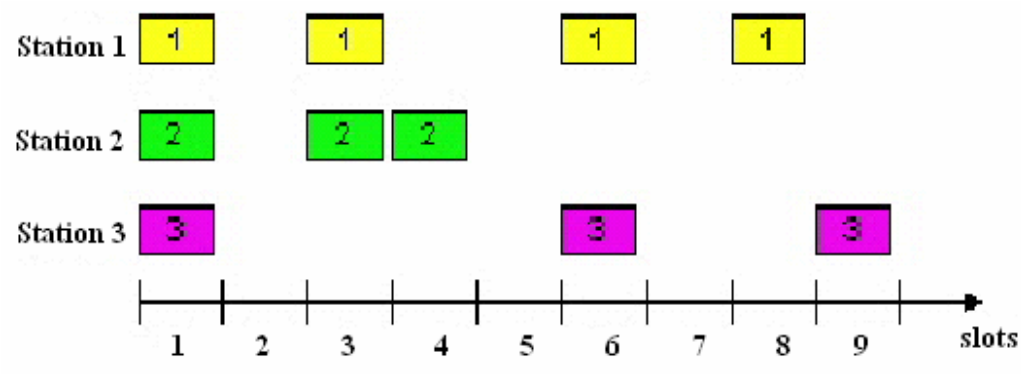

Figure 5: Frames in Slotted ALOHA protocol

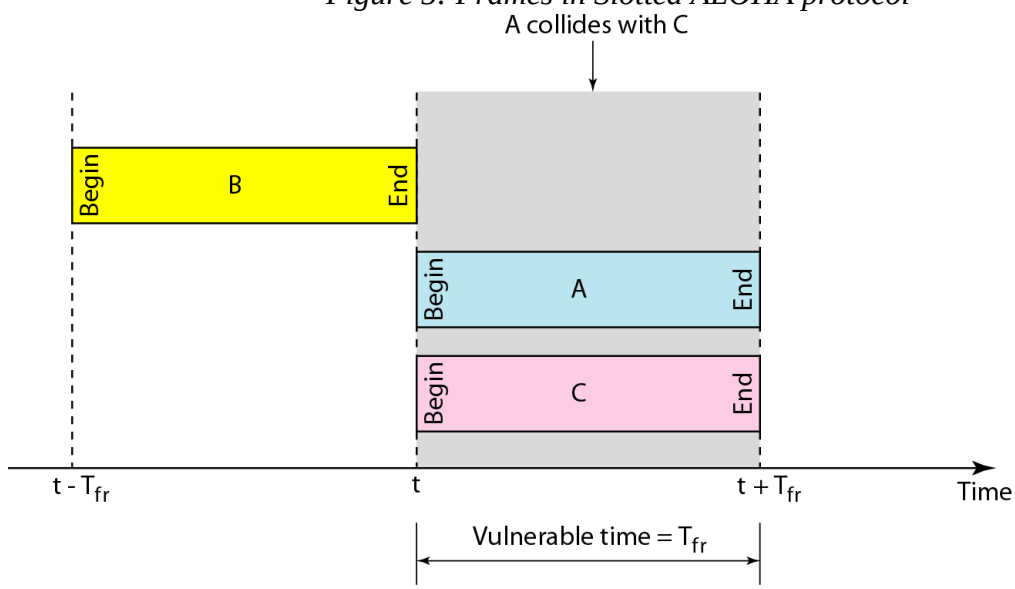

Figure 6: Vulnerable Time in Slotted ALOHA protocol

Since, the stations can only send frames at the start of time slot, the venerable time is reduced by half i.e. Vulnerable Time = T_{fr}

Throughput Of Slotted ALOHA Protocol

The throughput for Slotted ALOHA is:

$$S = G \times e^{-G}$$

The maximum throughput

S_{max}= 0.368 when G= 1 (G=frame per millisecond or load)

Example

A Slotted ALOHA network transmits 200-bit frames on a shared channel of 200 kbps. What is the throughput if the system (all stations together) produces a) 1000 frames per second b) 500 frames per second and c) 250 frames per second?

Solution

The frame transmission time is 200/200 kbps or 1 ms.

a) If the system creates 1000 frames per second, this is 1 frame per millisecond. The load is 1. In this case $S = G \times e^{-G}$ or S = 0.368 (36.8percent). This means that the throughput is 1000 × 0.368 = 368 frames. Only 368 frames out of 100 will probably survive. ***Note: that this is the maximum throughput case, percentagewise.***

b) If the system creates 500 frames per second, this is (1/2) frame per millisecond. The load is (1/2). In this case $S = G \times e^{-G}$ or S = 0.303 (30.3 percent). This means that the throughput is 500 × 0.303 = 151 and that only 151 frames out of 500 will probably survive.

c) If the system creates 250 frames per second, this is (1/4) frame per millisecond. The load is (1/4). In this case $S = G \times e^{-G}$ or S = 0.195 (19.5 percent). This means that the throughput is 250 × 0.195 = 49. Only 49 frames out of 250 will probably survive.

CSMA

The poor efficiency of the ALOHA scheme can be attributed to the fact that a node start transmission without paying any attention to what others are doing. In situations where propagation delay of the signal between two nodes is small compared to the transmission time of a packet, all other nodes will know very quickly when a node starts transmission. This observation is the basis of the *carrier-sense multiple-access* (CSMA) protocol. In this scheme, a node having data to transmit first listens to the medium to check whether another transmission is in progress or not. The node starts sending only when the channel is free, that is there is no carrier. That is why the scheme is also known as *listen-before- talk.* There are three variations of this basic scheme as outlined below.

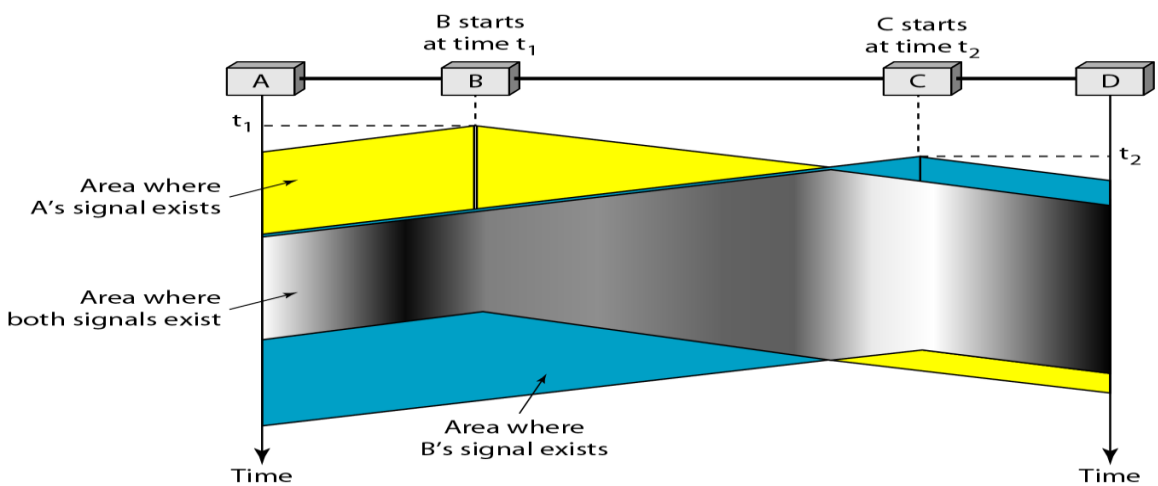

Figure 7: Space Time Model of the collision of CSMA

(i) **1-persistent CSMA**: In this case, a node having data to send, start sending, if the channel is sensed free. If the medium is busy, the node continues to monitor until the channel is idle. Then it starts sending data.

(ii) **Non-persistent CSMA**: If the channel is sensed free, the node starts sending the packet. Otherwise, the node waits for a random amount of time and then monitors the channel.

(iii) **p-persistent CSMA**: The p-persistent approach combines the advantages of the other two strategies. It reduces the chance of collision and improves efficiency. In this method, after the station finds the line idle it follows these steps:

1. With probability *p,* the station sends its frame.
2. With probability $q = 1 - p$, the station waits for the beginning of the next time slot and checks the line again.
    a. If the line is idle, it goes to step 1.
    b. If the line is busy, it acts as though a collision has occurred and uses the back-off procedure.

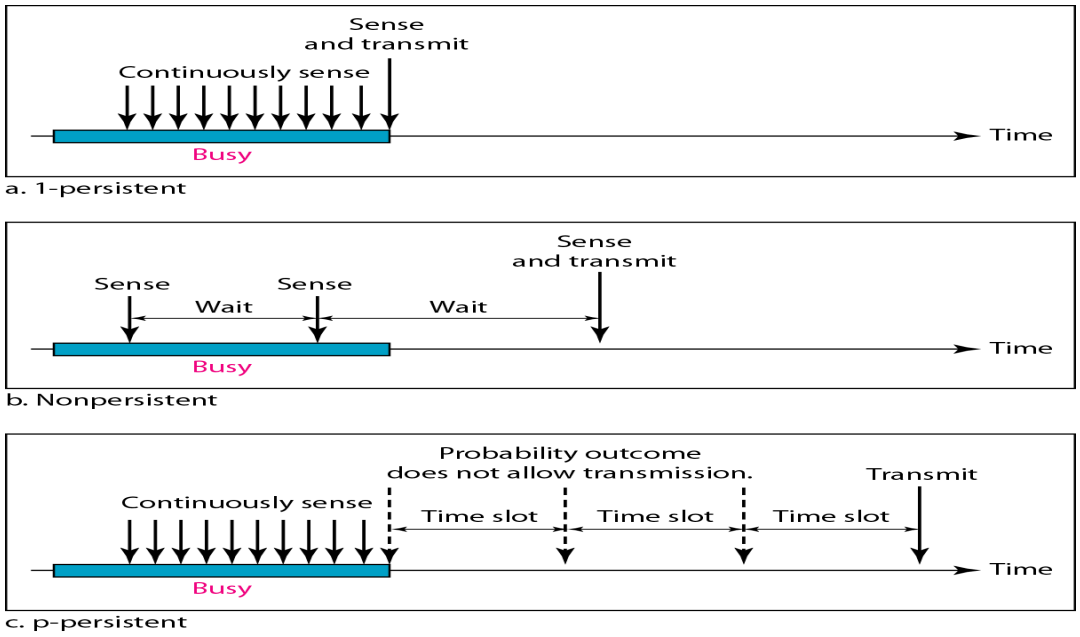

Figure 7: Different Persistent Strategy

CSMA/CD

CSMA/CD protocol can be considered as a refinement over the CSMA scheme. CSMA doesn't specify the procedures after a collision has occurred. In CSMA scheme, when two packets collide the channel remains unutilized for the entire duration of transmission time of both the packets. If the propagation time is small (which is usually the case) compared to the packet transmission time, wasted channel capacity can be considerable. This wastage of channel capacity can be reduced if the nodes continue to monitor the channel while transmitting a packet and immediately cease transmission when collision is detected. This refined scheme is known as *Carrier Sensed Multiple Access with Collision Detection* (CSMA/CD) or *Listen-While-Talk.*

On top of the CSMA, the following rules are added to convert it into CSMA/CD:

(i) If a collision is detected during transmission of a packet, the node immediately ceases transmission and it transmits jamming signal for a brief duration to ensure that all stations know that collision has occurred.

(ii) After transmitting the jamming signal, the node waits for a random amount of time and then transmission is resumed.

The random delay ensures that the nodes, which were involved in the collision are not likely to have a collision at the time of retransmissions. To achieve stability in the back off scheme, a technique known as *binary exponential back off* is used. A node will attempt to transmit repeatedly in the face

of repeated collisions, but after each collision, the mean value of the random delay is doubled. After 15 retries (excluding the original try), the unlucky packet is discarded and the node reports an error. A flowchart representing the binary exponential back off algorithm is given in Figure 8.

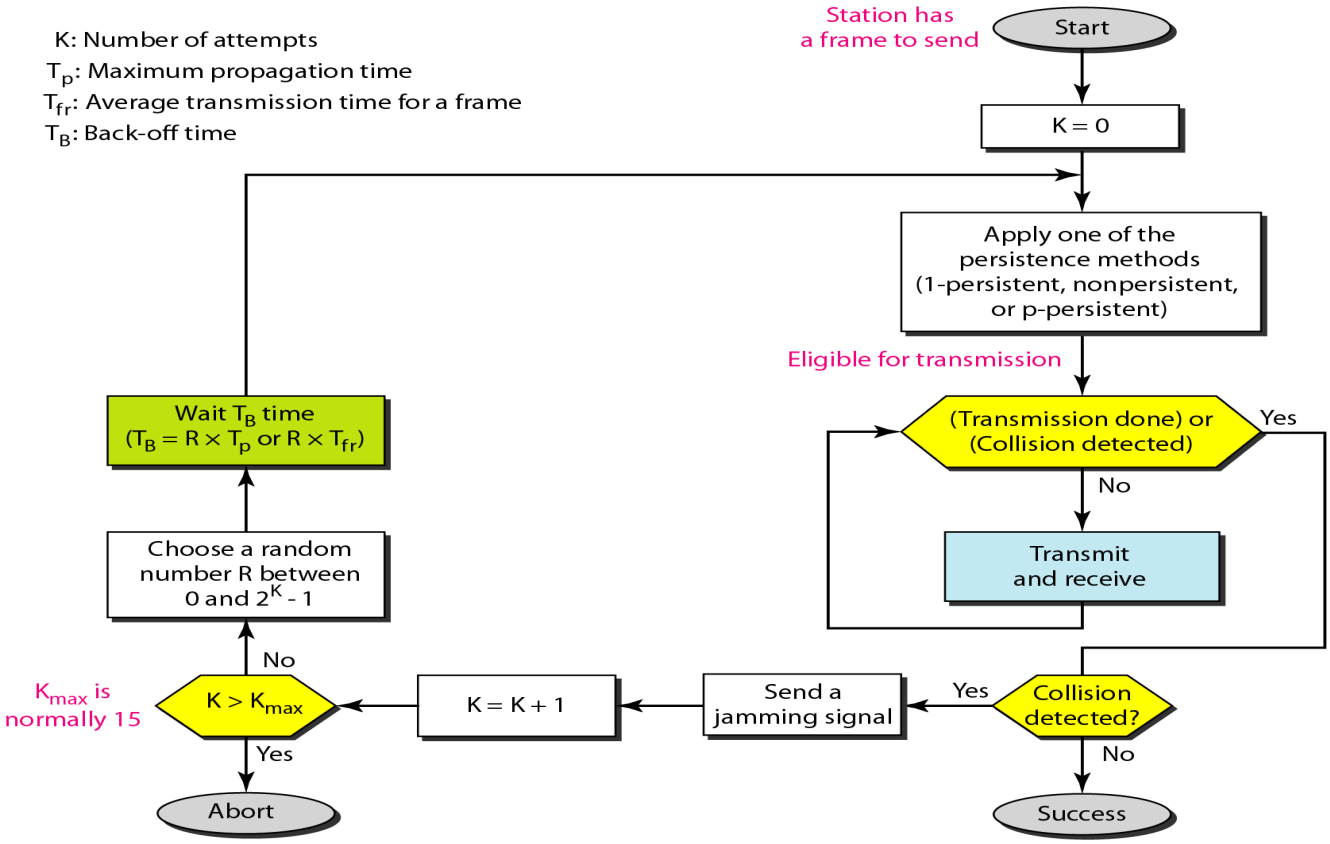

Figure 8: Binary exponential back off algorithm used in CSMA/CD

2. IEEE Standards

In 1985, the Computer Society of the IEEE started a project, called Project 802, to set standards to enable intercommunication among equipment from a variety of manufacturers. Project 802 is a way of specifying functions of the physical layer and the data link layer of major LAN protocols.

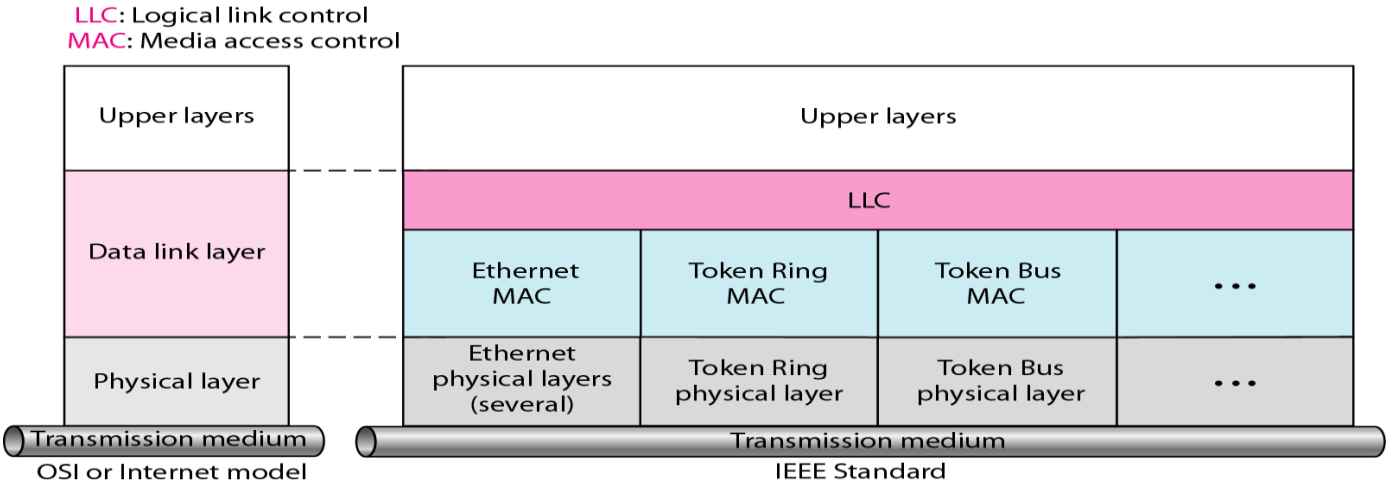

Figure 11: IEEE Standard for LAN

IEEE divides the data-link layer into Media Access Sub-Layer and Logical Link Control Sub-Layer. A LAN can be constructed using various IEEE standards like Ethernet, Token Ring, Token Bus etc. as shown in Figure 11 above.

STANDARD (CSMA/CD) ETHERNET (IEEE 802.3)

Ethernet is a physical and data link layer technology for local area networks (LANs). The original Ethernet was created in 1976 at Xerox's Palo Alto Research Center (PARC). Since then, it has gone through four generations.

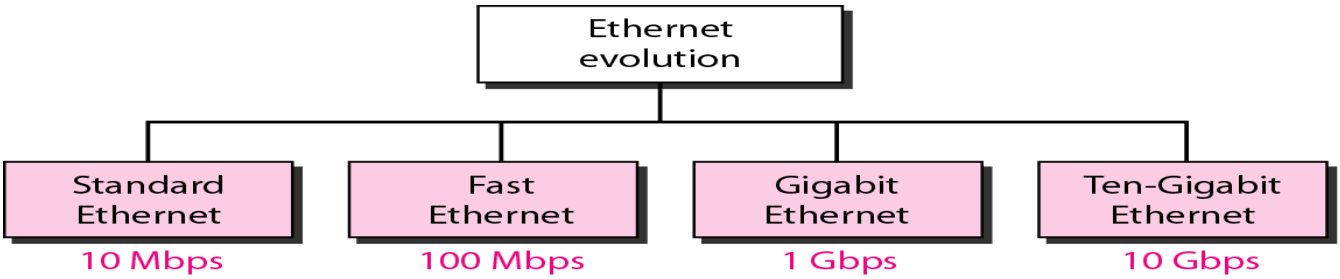

Figure 12: Four Generation of Ethernet

Ethernet Frame Format

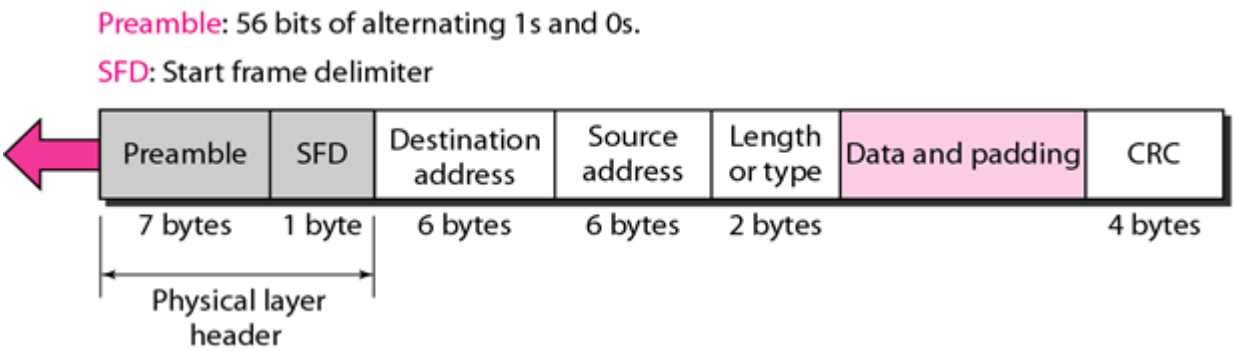

Figure 13: Ethernet Frame with Physical Layer Header

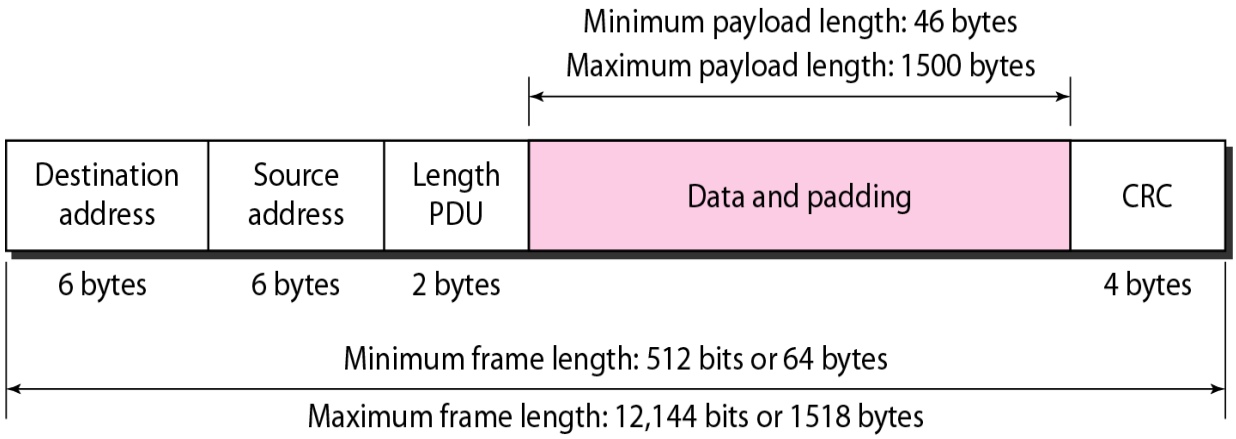

Figure 14: Actual Ethernet Frame

Ethernet Address Format

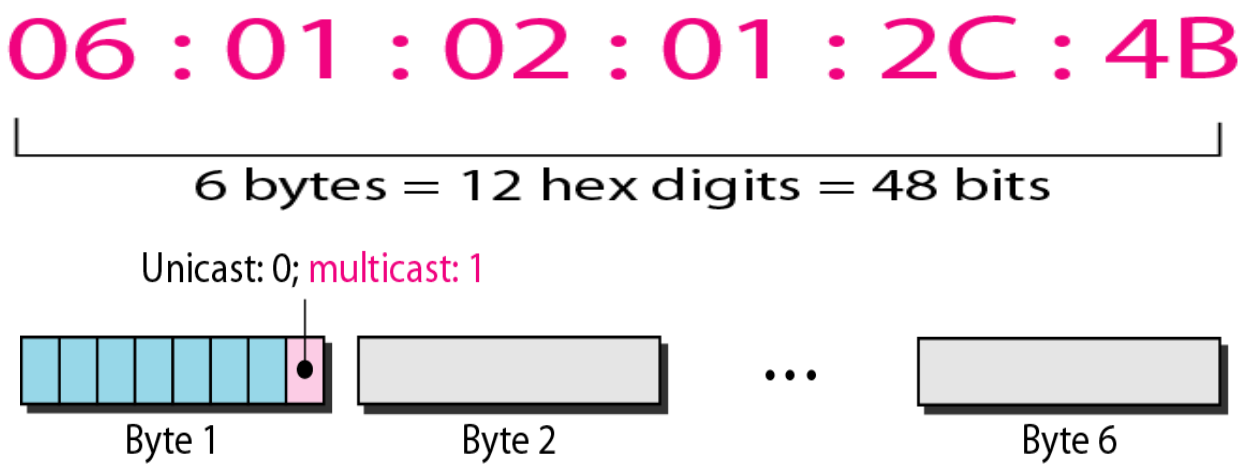

The least significant bit of the first byte defines the type of address. If the bit is 0, the address is unicast; otherwise, it is multicast. The broadcast destination address is a special case of the multicast address in which all bits are 1s.

Categories of Ethernet

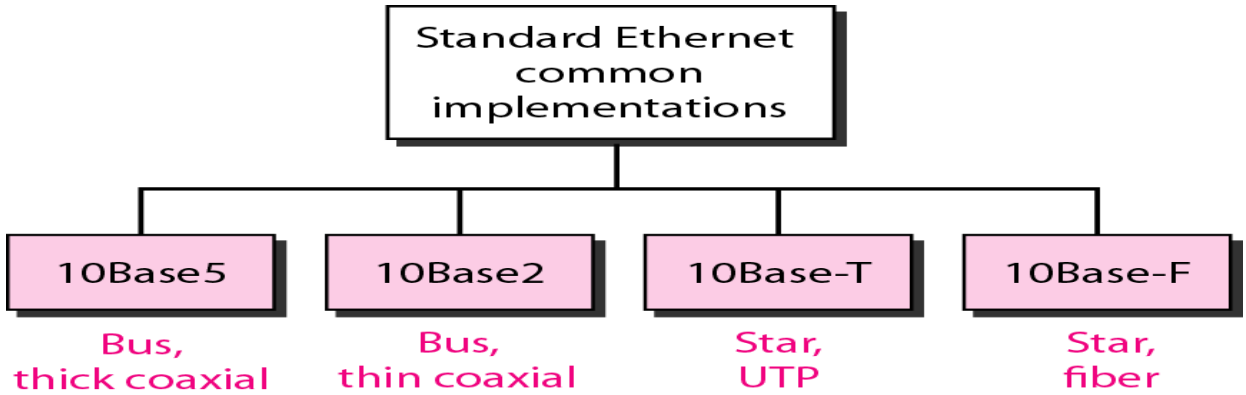

Figure 15: Categories of Ethernet

Token Ring (IEEE 802.5)

Token ring: a number of stations connected by transmission links in a ring topology. Information flows *in one direction along the ring* from source to destination and back to source.

Medium access control is provided by a small frame, **the token** that circulates around the ring when all stations are idle. ***Only*** *the station possessing the token is allowed to transmit at any given time.*

When a station wishes to transmit, it must wait for token to pass by and *seize the token.*

- One approach: change one bit in token which transforms it into a *"start-of-frame sequence"* and appends frame for transmission.
- Second approach: station claims token by removing it from the ring.

Frame circles the ring and is removed by the transmitting station.

Each station interrogates passing frame, if destined for station, it copies the frame into local buffer. *{Normally, there is a one bit delay as the frame passes through a station.}*

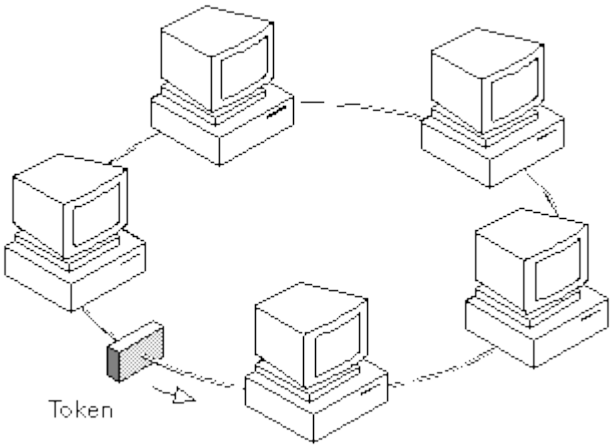

Token Format

The token is the shortest frame transmitted (24 bit).
MSB (Most Significant Bit) is always transmitted first - as opposed to Ethernet

SD	AC	ED

SD = Starting Delimiter (1 byte)
AC = Access Control (1 byte)
ED = Ending Delimiter (1 byte)

Token Ring Frame Format:

MSB (Most Significant Bit) is always transmitted first - as opposed to Ethernet

SD	AC	FC	DA	SA	DATA	CRC	ED	FS

SD=Starting Delimiter(1 byte)
AC=Access Control(1 byte)
FC = Frame Control (1 Octet)
DA = Destination Address (2 or 6 byte)
SA = Source Address (2 or 6 byte)
DATA = Information 0 or more bytes up to 4027
CRC = Checksum(4 byte)
ED = Ending Delimiter (1 byte)
FS=Frame Status (1 byte)

3. Wireless LAN (IEEE 802.11)

IEEE has defined the specifications for a wireless LAN, called IEEE 802.11, which covers the physical and data link layers.

Basic Service Set

IEEE 802.11 defines the basic service set (BSS) as the building block of a wireless LAN. A basic service set is made of stationary or mobile wireless stations and an optional central base station, known as the access point (AP). Figure 22 shows two sets in this standard.

The BSS without an AP is a stand-alone network and cannot send data to other BSSs. It is called an *ad hoc architecture.* In this architecture, stations can form a network without the need of an AP; they can locate one another and agree to be part of a BSS. A BSS with an AP (router) is sometimes referred to as an *infrastructure* network.

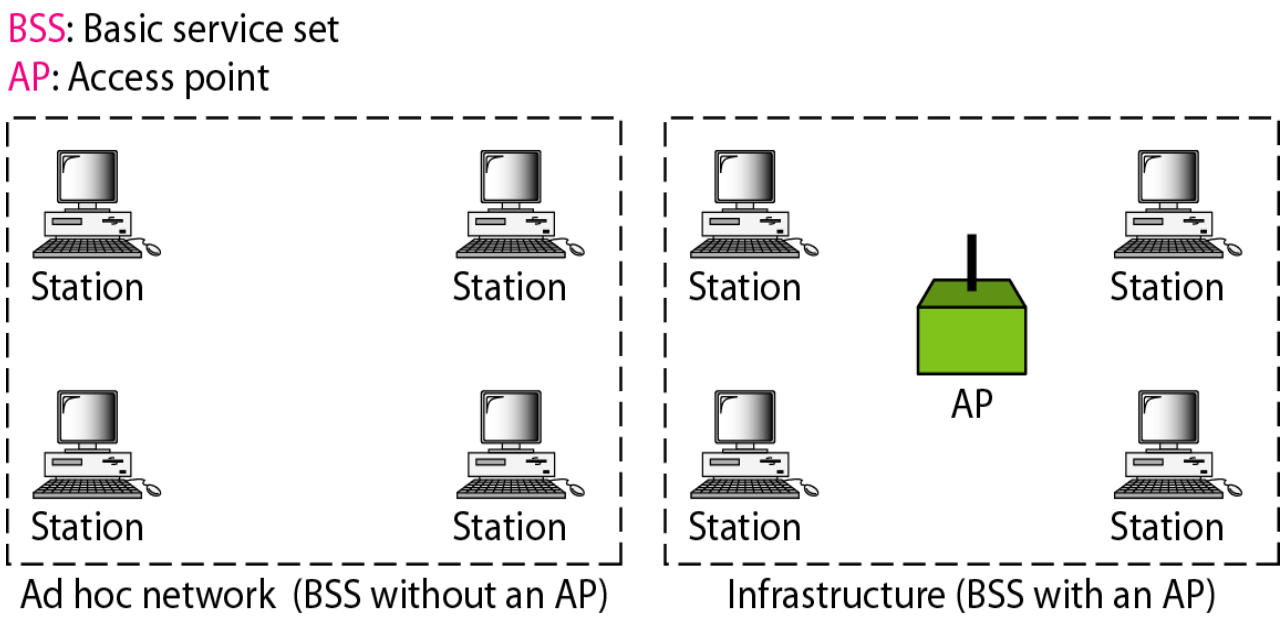

Figure 22: Basic Service Set

Extended Service Set

An extended service set (ESS) is made up of two or more BSSs with APs. In this case, the BSSs are connected through a *distribution system*, which is usually a wired LAN. The distribution system connects the APs in the BSSs. IEEE 802.11 does not restrict the distribution system; it can be any IEEE LAN such as an Ethernet. Stations can be mobile and stationary. The mobile stations are normal stations inside a BSS. The stationary stations are AP stations that are part of a wired LAN. Figure 23 shows an ESS.

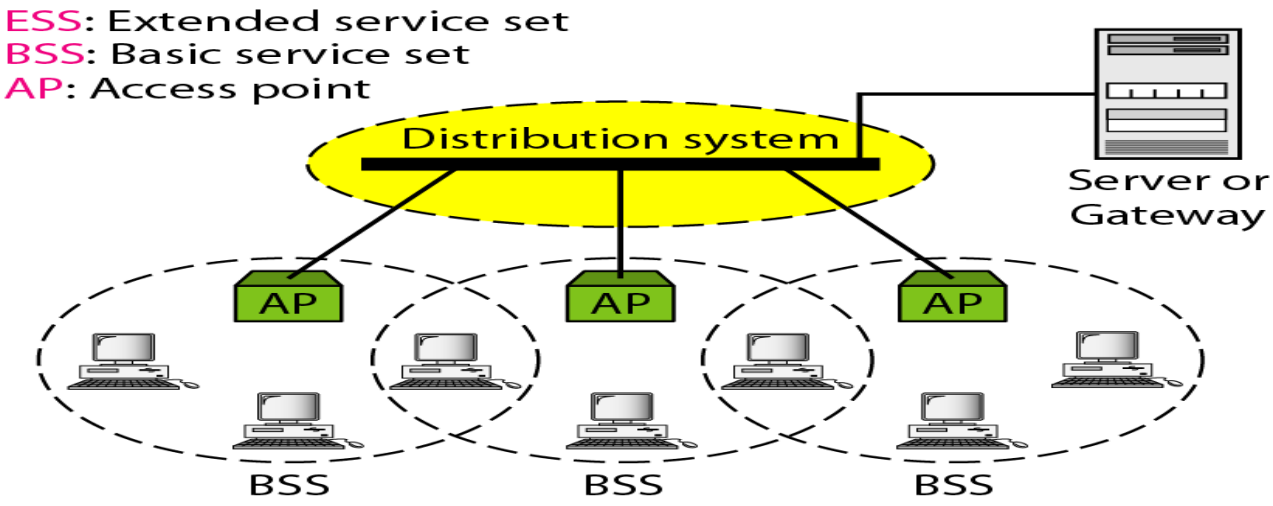

Figure 23: Extended Service Set

- DCF uses *CSMA/CA* as the access method.
- The point coordination function (PCF) is an optional access method that can be implemented in an infrastructure network (not in an ad hoc network). It is implemented on top of the DCF and is used mostly for time-sensitive transmission. PCF has a centralized, contention-free polling access method. The AP performs polling for stations that are capable of being polled. The stations are polled one after another, sending any data they have to the AP.

MAC Sub-layer

IEEE 802.11 defines two MAC sub-layers: the distributed coordination function (DCF) and point coordination function (PCF). Figure 24 shows the relationship between the two MAC sub-layers, the LLC sub-layer, and the physical layer.

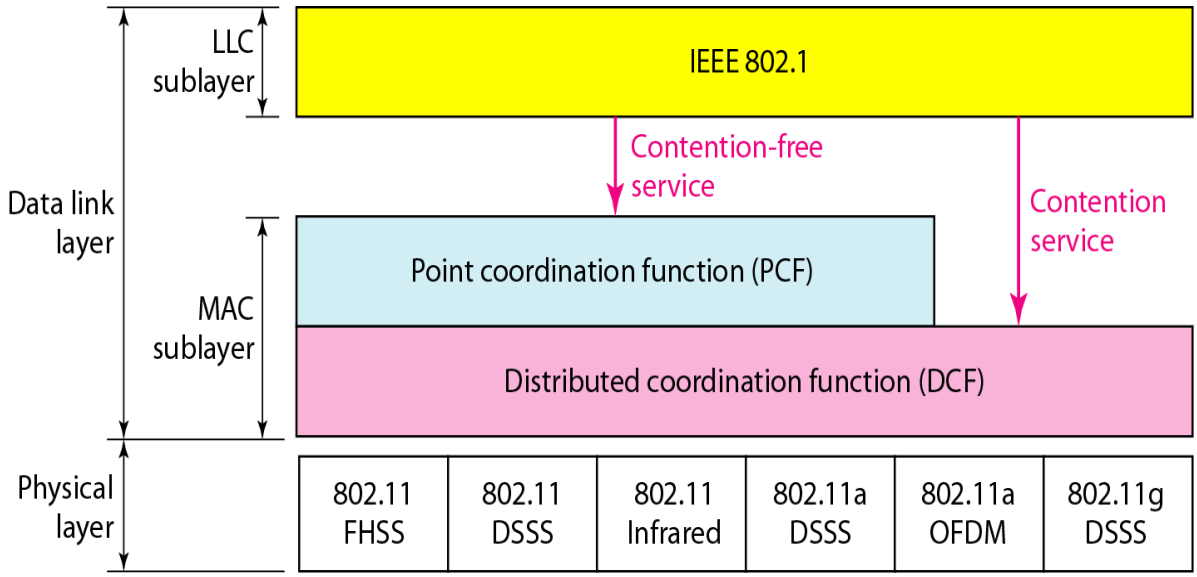

Figure 24: MAC Layers in IEEE 802.11 standard

Asynchronous Transfer Mode (ATM)

Asynchronous Transfer Mode (ATM) is a technology that has the potential of revolutionizing data communications and telecommunications. Asynchronous Transfer Mode (ATM) is, "a telecommunications concept defined by ANSI and ITU standards for carriage of a complete range of user traffic, including voice, data, and video signals". ATM was developed to meet the needs of the Broadband Integrated Services Digital Network, as defined in the late 1980s and designed to unify telecommunication and computer networks. It was designed for a network that must handle both traditional high-throughput data traffic, real-time, low-latency content such as voice and video. ATM offers the economically sound "bandwidth on demand" features of packet-switching technology at the high speeds required for today's LAN and WAN networks. ATM is a cell-relay technology that divides upper-level data units into 53-byte cells for transmission over the physical medium. It operates independently of the type of transmission being generated at the upper layers AND of the type and speed of the physical-layer medium below it.

ATM provides functionality that is similar to both circuit switching and packet switching networks: ATM uses asynchronous time-division multiplexing and encodes data into small, fixed-sized packets called cells. This differs from approaches such as the Internet Protocol or Ethernet that use variable sized packets and frames. ATM uses a connection-oriented model in which a virtual circuit must be established between two endpoints before the actual data exchange begins. These virtual circuits may be “permanent”, i.e. dedicated connections that are usually preconfigured by the service provider, or “switched”, i.e. set up on a per-call basis using signaling and disconnected when the call is terminated.

ATM Layer Architecture:

At the End User sites, ATM operates with a layered structure that is similar to the OSI 7-layered model. However, ATM only addresses the functionality of the two lowest layers of the OSI model: the physical layer (Layer 1) and the data link layer (Layer 2).

All other layers are irrelevant in ATM, as these layers are only part of the encapsulated information portion of the cell which is not used by the ATM network.

In ATM, the functionality of the two lower OSI layers are handled by three layers (shown here below the double line):

```
.-------------------------------------------------------------,
|   Application Layer                                         |
+-------------------------------------------------------------+
|   User Layers                                               |
+=============================================================+
|   ATM Adaptation Layer :      Convergence Sublayer          |
|                            -----------------------------------|
|                            Segmentation & Reassembly Sublayer |
+-------------------------------------------------------------+
|   ATM Layer                                                 |
+-------------------------------------------------------------+
|   Physical Layer :   Transmission Convergence Sublayer      |
|                      ----------------------------------------|
|                      Physical Medium Dependent Sublayer     |
+-------------------------------------------------------------+
```

The ATM Cell

Each individual ATM cell consists of a 5-byte cell header and 48 bytes of information encapsulated within its payload. The ATM network uses the header to support the virtual path and the virtual channel routing, and to perform a quick error check for corrupted cells.

The 5-byte header is structured as shown below:

```
|  8   |  7   |  6   |  5   |  4   |  3   |  2   |  1   |   bits
+------+------+------+------+------+------+------+------+
|  Generic Flow Control*    |  Virtual Path Identifier  |
+---------------------------+---------------------------+
| Virtual Path Identifier   | Virtual Channel Identifier|
+---------------------------+---------------------------+
|               Virtual Channel Identifier              |
+---------------------------+--------------------+------+
|Virtual Channel Identifier |   Payload Type ID  |  CLP |
+---------------------------+--------------------+------+
|                 Header Error Control                  |
+-------------------------------------------------------+
|                  INFORMATION PAYLOAD                  |

  *  For the UNI header only.  The NNI header contains an
     additional 4 bytes of VPI information here instead.
```

Generic Flow Control (GFC)

The GFC field of the header is only defined across the UNI. It is intended to control the traffic flow across the UNI and to alleviate short-term overload conditions. It is currently undefined and these 4 bits must be set to 0's.

Virtual Path Identifier (VPI)

The VPI, an 8-bit field for the UNI and a 12-bit field for the NNI, is used to identify virtual paths. In an idle cell, the VPI is set to all 0's. (Together with the Virtual Channel Identifier, the VPI provides a unique local identification for the transmission.)

Virtual Channel Identifier (VCI)

This 16-bit field is used to identify a virtual channel. For idle cells, the VCI is set to all 0's. (Together with the Virtual Path Identifier, the VCI provides a unique local identification for the transmission.)

Payload Type Identifier (PTI)

The three bits of the PTI are used for different purposes. Bit 4 is set to 1 to identify operation, administration, or maintenance cells (i.e., anything other than data cells).

Bit 3 is set to 1 to indicate that congestion was experienced by a data cell in transmission and is only valid when bit 4 is set to 0.

Bit 2 is used by AAL 5 to identify the data as Type 0 (beginning of message, continuation of message; bit

= 0) or Type 1 (end of message, single-cell message; bit = 1) when bit 4 is set to 0. It may also be used for management functions when bit 4 is set to 1. This bit is currently carried transparently through the network and has no meaning to the end user when AAL 5 is NOT in use.

Cell Loss Priority (CLP)

The 1-bit CLP field is used for explicit indication of the priority of the cell. It may be set by the AAL Layer to indicate cells to discard in cases of congestion, or by the network as part of the traffic management on commercial subscriber networks.

Header Error Control (HEC)

This is an 8-bit cyclical redundancy check computed for all fields of the first 4 bytes of the ATM cell header ONLY. It is capable of detecting all single-bit errors and some multiple-bit errors.

The HEC is compared by each switch as the ATM cell is received and all cells with HEC discrepancies (errors) are discarded. Cells with single-bit errors may be subject to error correction (if supported or discarded.

When a cell is passed through the switch and the VPI/VCI values are altered, the HEC is recalculated for the cell prior to being passed out the port.

Frame Relay

Frame relay is a standardized wide area network technology that specifies the physical and logical link layers of digital telecommunications channels using a packet switching methodology. Frame Relay is a protocol standard for LAN internetworking which provides a fast and efficient method of transmitting information from a user device to LAN bridges and routers. Network providers commonly implement frame relay for voice and data as an encapsulation technique, used between local area networks over a wide area network. The frame relay network handles the transmission over a frequently changing path transparent to all end-user extensively used WAN protocols. It is less expensive than leased lines and that is one reason for its popularity. The extreme simplicity of configuring user equipment in a frame relay network offers another reason for frame relay's popularity. Frame relay puts data in a variable-size unit called a frame and leaves any necessary error correction (retransmission of data) up to the end-points, which speeds up overall data transmission. Frame relay is offered by a number of service providers, including AT&T. Frame relay is provided on fractional T-1 or full T-carrier system carriers. Frame relay complements and provides a mid-range service between ISDN, which offers bandwidth at 128 Kbps, and Asynchronous Transfer Mode (ATM), which operates in somewhat similar fashion to frame relay but at speeds from 155.520 Mbps or 622.080 Mbps.

Frame relay is based on the older X.25 packet-switching technology which was designed for transmitting analog data such as voice conversations. Unlike X.25 which was designed for analog signals, frame relay is a fast packet technology, which means that the protocol does not attempt to correct errors. When an error is detected in a frame, it is simply "dropped." (Thrown away).

Frame relay is often used to connect local area networks with major backbones as well as on public wide area networks and also in private network environments with leased lines over T-1 lines. It requires a dedicated connection during the transmission period. It's not ideally suited for voice or video transmission, which requires a steady flow of transmissions. However, under certain circumstances, it is used for voice and video transmission.

Frame relay relays packets at the Data Link layer of the Open Systems Interconnection (OSI)

model rather than at the Network layer. A frame can incorporate packets from different protocols such as Ethernet and X.25. It is variable in size and can be as large as a thousand bytes or more. It also contains congestion and status signals which the network sends to the user.

Advantages of Frame Relay

Frame Relay offers an attractive alternative to both dedicated lines and X.25 networks for connecting LANs to bridges and routers. The success of the Frame Relay protocol is based on the following two underlying factors:

Because virtual circuits consume bandwidth only when they transport data, many virtual circuits can exist simultaneously across a given transmission line. In addition, each device can use more of the bandwidth as necessary, and thus operate at higher speeds.

The improved reliability of communication lines and increased error-handling sophistication at end stations allows the Frame Relay protocol to discard erroneous frames and thus eliminate time-consuming error-handling processing.

These two factors make Frame Relay a desirable choice for data transmission; however, they also necessitate testing to determine that the system works properly and that data is not lost.

Frame Relay Structure

Standards for the Frame Relay protocol have been developed by ANSI and CCITT simultaneously. The separate LMI specification has basically been incorporated into the ANSI specification. The following discussion of the protocol structure includes the major points from these specifications.

The Frame Relay frame structure is based on the LAPD protocol. In the Frame Relay structure, the frame header is altered slightly to contain the Data Link Connection Identifier (DLCI) and congestion bits, in place of the normal address and control fields. This new Frame Relay header is 2 bytes in length and has the following format:

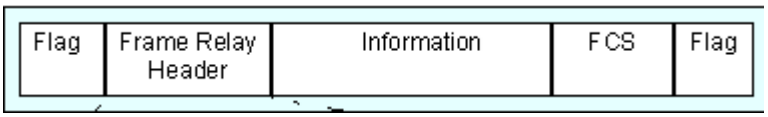

Explicit Congestion Notification Bits

When the network becomes congested to the point that it cannot process new data transmissions, it begins to discard frames. These discarded frames are retransmitted, thus causing more congestion. In an effort to prevent this situation, several mechanisms have been developed to notify user devices at the onset of congestion, so that the offered load may be reduced.

Two bits in the Frame Relay header are used to signal the user device that congestion is occurring on the line: They are the Forward Explicit Congestion Notification bit and the Backward Explicit Congestion Notification bit. The FECN is changed to 1 as a frame is sent downstream toward the destination location when congestion occurs during data transmission. In this way, all downstream nodes and the attached user device learn about congestion on the line. The BECN is changed to 1 in a

frame traveling back toward the source of data transmission on a path where congestion is occurring. Thus the source node is notified to slow down transmission until congestion subsides.

Difference between ATM and Frame Relay

1. Although both techniques are based on end to end delivery of quantized data, there are many differences in terms of sizes of the data quanta, application network types, controlling techniques etc.
2. Although ATM uses fixed size packets (53 bytes) for data communication, frame relay uses variable packet sizes depending on the type of information to be sent. Both information blocks have a header in addition to data block and transfer is connection oriented.
3. Frame Relay is used to connect Local Area Networks (LAN) and it is not implemented within a single area network contrast to ATM where data transfers are within a single LAN.
4. ATM is designed to be convenient for hardware implementation and therefore, cost is higher compared to frame relay, which is software controlled. Therefore frame relay is less expensive and upgrading is easier.
5. Frame relay has a variable packet size. Therefore it gives low overhead within the packet which results it an efficient method for transmitting data. Although fixed packet size in ATM, can be useful for handling video and image traffic at high speeds, it leaves a lot of overhead within the packet, particularly in short transactions.

Network Management

In the early days, network was small and local Network manager's job includes

- Installation: attach PCs, printers, etc. to LAN
- Configuration: NICs, protocol stack, user app's shared printers, etc.
- Testing: Ping was sufficient to "manage" network. More devices: bridge,

router Job was manageable

But now a day's network is huge and complex and ongoing maintenance issues

- How to optimize performance?
- How to handle failures and network changes?
- How to extend network capacity?
- How to account for network usages?
- How to solve network security issues?

In the past, the network manager might take all the responsibilities. Today the task has divided into specialties:

Server admin

System admin

Network admin

Security specialist

Today, networks are larger and more complicated, so more demands on network manager

How to monitor and control the network effectively and timely?

Management tools are needed, Network-based management tools: use the network to manage the

network (remotely)

To control:

- Simple Network Management Protocol (SNMP)
- Management Information Base (MIB)
- Network Management System (NMS)

To monitor:

- Remote Monitor (RMON)

What is Network Management?

Definition by Saydam (in Journal of Networks and System Management, published in Dec. 1996):

Network management includes the deployment, integration and coordination of the hardware, software, and human elements to monitor, test, poll, configure, analyze, evaluate, and control the network and element resources to meet the real-time, operational performance, and Quality of Service requirements at a reasonable cost.

In brief: Network management is mostly a combination of local and remote configuration and management with software.

Remote network management is accomplished when one computer is used to monitor, access, and control the configuration of other devices on the network.

Network Management Vocabulary

Managed Device

Devices to be monitored/controlled, e.g., router, switch, hub, bridge, workstation.

A managed device may have several managed objects to be managed

A software (agent) is installed to provide access to information/parameters (data) about the device, which is called Management Information Base (MIB)

Managing Entity

Used by the manager/Admin to do network management PC, notebook, terminal, etc., installed with a software called Network Management System (NMS) NMS displays/analyzes data from management agents

Network Management Protocol

Runs between the managing entity and the managed devices

The managing entity can query the status of the managed devices and take actions at the devices via its agents

Agents can use the protocol to inform the managing entity of exceptional events

E.g., SNMP: Simple Network Management Protocol

Managing agents located at managed devices are periodically queried by the managing entity through a network management protocol.

Network management covers a wide area, including:

- Security: Ensuring that the network is protected from unauthorized users.
- Performance: Eliminating bottlenecks in the network.
- Reliability: Making sure the network is available to users and responding to hardware and software malfunctions

Function of Network Management:

- Fault Management
- Configuration Management
- Accounting Management
- Performance Management
- Security Management

Fault Management:

A fault is an event that has a negative significance. The goal of fault management is to recognize, isolate, correct and log faults that occur in the network. Furthermore, it uses trend analysis to predict errors so that the network is always available. This can be established by monitoring different things for abnormal behavior. Faults may occur due to trouble in the transmission medium, errors in networking devices like routers and bridges, or even due to faulty functioning of nodes in the network. These faults may be serious and result in the system to crash while others may just slowdown the network or may even be of no apparent consequence.

To avoid failures to result in bringing the entire or even part of the network to a halt, administrators usually have backup or remedial measures ready. These may range from keeping alternate routes up and running at a cost to the company to having redundant devices at important junctions so that a failure in the primary device does not cause major hindrances in the functioning of the network.

The objective of fault management is to identify faults as quickly as possible and to identify the cause so that remedial measure can be taken. Monitor faults to manage them should be the mantra of a network manager.

The objective of fault monitoring is to identify faults as quickly as possible, but fault management doesn't end there. Fault Management consists of identification, tracing and correcting the fault that has occurred. Fault Management functions can therefore be listed as below:

Identify Faults

Locate Faults
Isolate Faults
Identify Possible Reasons
Suggest Possible Remedies
Anticipate Faults

Performance Management:

Performance management is focused on ensuring that network performance remains at acceptable levels. It enables the manager to prepare the network for the future, as well as to determine the efficiency of the current network, for example, in relation to the investments done to set it up.

The network performance addresses the throughput, network response times, packet loss rates, link utilization, percentage utilization, error rates and so forth. Actively monitoring current network performance is an important step in identifying problems before they occur, as part of a proactive network management strategy. By collecting and analyzing performance data, the network health can be monitored. Trends can indicate capacity or reliability issues before they affect services.

Also, performance thresholds can be set in order to trigger an alarm. Alarms vary depending upon the severity of the problem.

In other words, the performance monitoring issues must be clearly indicative of the features that they represent and monitor. If not clearly and well indicated, the administrator may be facing issues like not being able to identify the indicators properly, or not being able to decide conclusively what each mean. Such indicators must also be measured accurately and fast enough for a quick judgment to be delivered and therefore ensuring better performance of the network.

Performance Management is basically three tasks rolled into one:

1. Performance Measurement where the actual statistics about the network is gathered through observation.
2. Performance Analysis which consists of using software tools to understand and get usable information out of the gathered statistical data.
3. Synthetic Traffic Generation which is the testing of the network using artificially generated network traffic under controlled environment to understand network behavior, test recovery and find possible hot spots for error.

Accounting Management:

Accounting normally comes with business. Well correct and not so correct.

Accounting means to keep count. When it comes to money, we keep count of money, and in the real world since everything ultimately comes down to money, it seems sound to keep count of money. Money may not however be hard cash. Money is involved in the network set up also. Money is involved in the work that is being carried out using the said network. The data that travels across the network fetches money. It's just that we keep track of this money in different forms.

Like for example, if an organization has leased a 2Mbps line from a service provider and the service agreement says that the line will have 95% availability with the MTTR being 30 minutes

and a certain failure takes more than that, well the service provider has to pay up. Money!

Accounting in a network may have other uses also. If it is the network of a cyber cafe, then the proprietor would certainly not allow somebody paying for 1 hours surfing time to be using the terminal for 2 hours. Individual users surf time can be monitored and disabled when the paid up time exhausts.

Accounting can also help in efficient fault detection and avoidance policy framing.

Accounting management is the job of keeping track of the users and resources in a network for various administrative and maintenance issues.

Configuration Management:

The goals of configuration management include:

To gather and store configurations from network devices.

To simplify the configuration of the device

To track changes that are made to the configuration.

To configure ('provision') circuits or paths through non-switched networks to plan for future expansion and scaling

Configuration management is concerned with monitoring system configuration information, and any changes that take place. This area is especially important, since many network issues arise as a direct result of changes made to configuration files, updated software versions, or changes to system hardware. A proper configuration management strategy involves tracking all changes made to network hardware and software. Examples include altering the running configuration of a device, updating the OS version of a router or switch, or adding a new modular interface card. While it is possible to track these changes manually, a more common approach is to gather this information using configuration management software.

Security Management:

Security management is the process of controlling access to assets in the network. Data security can be achieved mainly with authentication and encryption. Authorization to it configured with OS and DBMS access control settings.

Security management is not only concerned with ensuring that a network environment is secure, but also that gathered security-related information is analyzed regularly. Security management functions include managing network authentication, authorization, and auditing, such that both internal and external users only have access to appropriate network resources. Other common tasks include the configuration and management of network firewalls, intrusion detection systems, and security policies.

Multimedia Networking:

In general, multimedia is an integration of text, graphics, still and moving images, animation, sounds, and any other medium where every type of information can be represented, stored, transmitted and processed digitally.

Now a demonstration of multimedia application sharing is been implemented within a computer network. In education multimedia learning packages have been mounted on file-servers, use of the World Wide Web is widespread, and some video conferencing is being used. So networking of computer based multimedia is possible. However network delivery of multimedia is not new, the broadcast television system has been available since the 1950's. The difference now is that the information which has previously been presented on radio, TV, or in books, is now being presented or can be accessed by computer networks. Multimedia communications have become part of the standard set of functions supported by the corporate network infrastructure. About two years ago, the deployment issues surrounding multimedia conferencing technology we described by market research firm Forward Concepts as the convergence of "price, performance, and plumbing."
Price declines and performance improvements have been enabled largely by advances in electronics and improved algorithms running on faster processors.

The Value of Multimedia

The modern view of multimedia communications and multimedia networks has its roots in videoconferencing. The traditional view of multimedia-enabled networks often looks for tangible value in terms of cost savings, especially reduced travel expenses. Videoconferencing allows individuals and groups to meet face-to-face without the expense and wear and tear associated with costly travel. As videoconferencing endpoints are installed throughout the corporation, it becomes easier and less expensive for far-flung project workgroups to meet regularly, and for managers to confer with colleagues and subordinates on a more personal level. But many people who regularly participate in videoconferences are convinced that saving money on travel represents only a fraction of the bottom-line benefits.
Videoconferencing speeds communications and helps employees work together and be more efficient. The real value is not in expense reduction, though expense reduction is usually the most tangible and quantifiable benefit, but in getting more things accomplished in less time with fewer people. Rapid communication is the real lifeblood of many businesses, whether it enables a parts designer to solve problems with a manufacturing engineer on the factory floor, a sales agent to interact with a customer across town, or a marketing manager to collaborate with a remote expert on the other side of the globe. The video-enabled network is thus the foundation for a better way to accomplish traditional tasks.
Another useful videoconferencing technology-based application is delivery of broadcast (one-way) audio- video streams. With a multimedia-enabled network, corporations can deliver to suitably equipped desktops and conference rooms live newscasts such as CNN as well as live internal broadcasts such as annual shareholders meetings, special messages from the president, or even new product announcements from the marketing department.
IP-based telephony, another new technology, is also known as voice-over-IP (VoIP). For consumers, the allure is the possibility of using the Internet to make long distance calls for the price of a local connection.

For corporations, the tangible benefit is also cost reduction by using the installed data network or intranet to carry voice traffic which would otherwise be traveling over the toll-based public telephone system. Many corporations have an extensive IP network already installed, and the ability to deliver voice (and other multimedia) services will evolve and improve as switching, routing, and MPOA (multi-protocol over ATM) breakthroughs are incorporated.

Networked Multimedia Applications

Multimedia can roughly be defined as a technology that enables humans to use computers capable of processing textual data, audio and video, still pictures, and animation. Applications range over entertainment, education, information provision; design e.g. CAD/CAM, co-operative working such as video conferencing, application sharing, remote working and virtual reality experiences.

Multimedia applications for computers have been developed for single computing platforms such as the PC, Apple Mac and games machines. The importance of communications or networking for multimedia lies in the new applications that will be generated by adding networking capabilities to multimedia computers, and hopefully gains in efficiency and cost of ownership and use when multimedia resources are part of distributed computing systems. Widening of access to multimedia sources and potential markets in multimedia, video and information are commercial driving force for networking multimedia.

The reality of networking multimedia is that:-

The characteristics of multimedia make heavy demands on storage and transmission systems.

Data compression can be used to reduce the demands of multimedia, particularly of video and audio on these systems, but usually at the expense of some loss in the detail compared with the source and at extra cost.

The ways in which users or participants in multimedia sessions access multimedia or connect with others have important consequences for the storage and transmission systems. For instance multimedia learning material can be accessed directly from a server during a class or downloaded to student machines prior to a session. The demands on a connecting network are very different in each access mode.

The cost of transmitting multimedia information will determine the pace of development of networked multimedia applications.

The availability of standards for multimedia networking, particularly for inter-working between applications, the development of networked applications, and interworking between networks are essential to reduce the complexity and level of skill required in using multimedia.

Fundamental characteristics:

- ❒Typically delay sensitive
- ❍end-to-end delay
- ❍delay jitter
- ❒But loss tolerant: infrequent losses cause minor glitches
- ❒Antithesis of data, which are loss intolerant but delay tolerant

Classes of MM applications:

1) Streaming stored audio and video
2) Streaming live audio and video
3) Real-time interactive audio and video

Streaming Stored Multimedia Streaming:-Media stored at source

-Transmittd to client

-streaming: client playout beings before all data has arrived and timing constraint for still to be transmitted data: in time for playout

Streaming Live Multimedia Examples:

- ❒ Internet radio talk show
- ❒ Live sporting event

Streaming

- ❒ playback buffer
- ❒ playback can lag tens of seconds after transmission still have timing constraint